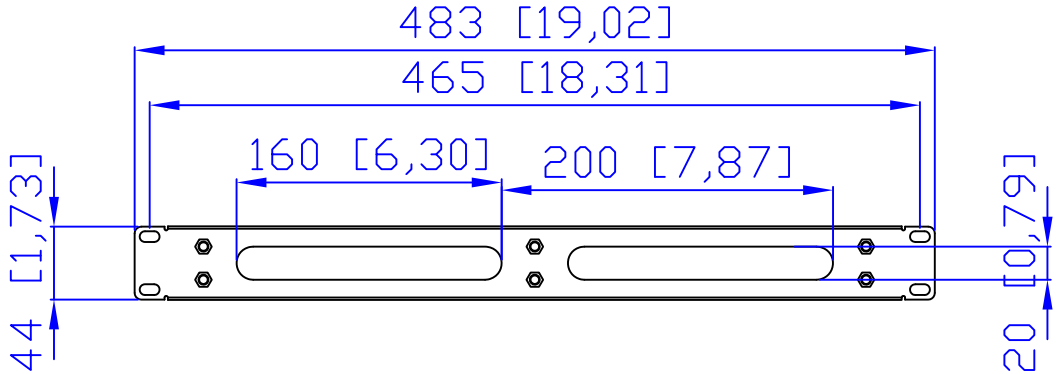

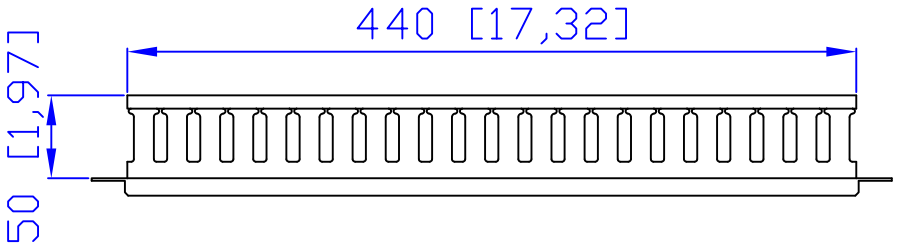

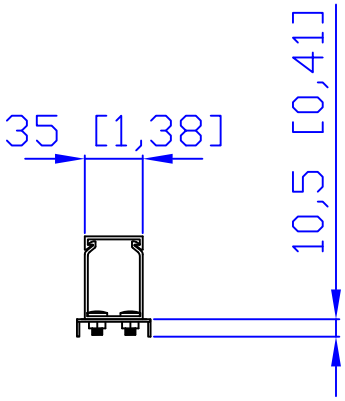

QUEST MANUFACTURING CO.
11200 NW 138 St., Medley, FL 33178 TEL: 305-513-8583 FAX: 305-513-9675
WWW.QuestManufacturing.net

ITEM NO.		HF19-01-040					
Drawed By		Date		Material			
Checked By		Date		Unit	mm [inch]		
Approved By		Date		Surface Finish	Power Coat	Scale	1:1