MATERIALS AND FINISHES:

BODY: ZINC ALLOY
PLATED: NICKEL (70 µ-in MIN) OVER COPPER (30 µ-in MIN)

CENTER CONTACT: PHOSPHOR BRONZE
PLATED: GOLD (1 µ-in MIN) OVER NICKEL (50 µ-in MIN)
OVER TIN (150 µ-in MIN)

INSULATOR: POLYPROPYLENE

HOUSING: PBT
COLOR: BLACK

MOUNTED POST: BRASS
PLATED: TIN (150 µ-in MIN) OVER NICKEL (50 µ-in MIN)

LOCKWASHER: PHOSPHOR BRONZE
PLATED: NICKEL (70 µ-in MIN) OVER COPPER (30 µ-in MIN)

SOLDER TAIL: STEEL WIRE
PLATED: TIN (100 µ-in MIN) OVER NICKEL (100 µ-in MIN)
OVER COPPER (20 µ-in MIN)

JAM NUT: BRASS
PLATED: NICKEL (70 µ-in MIN) OVER COPPER (30 µ-in MIN)

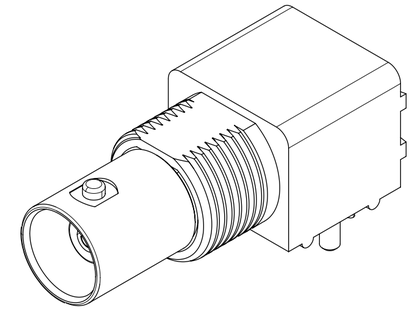

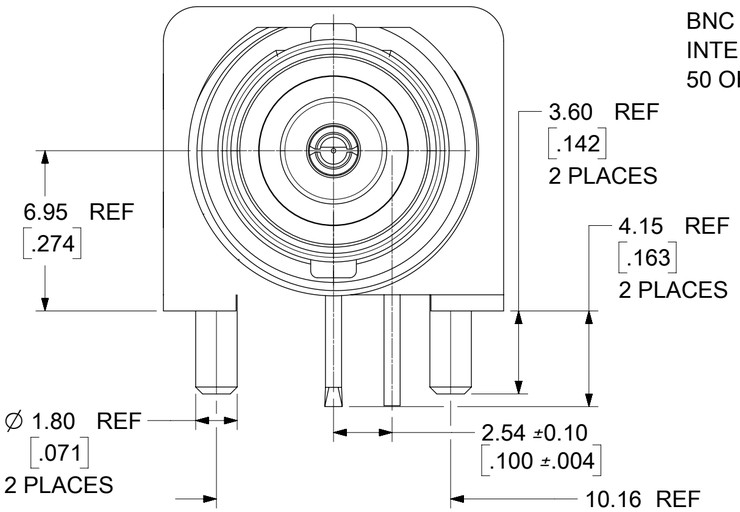

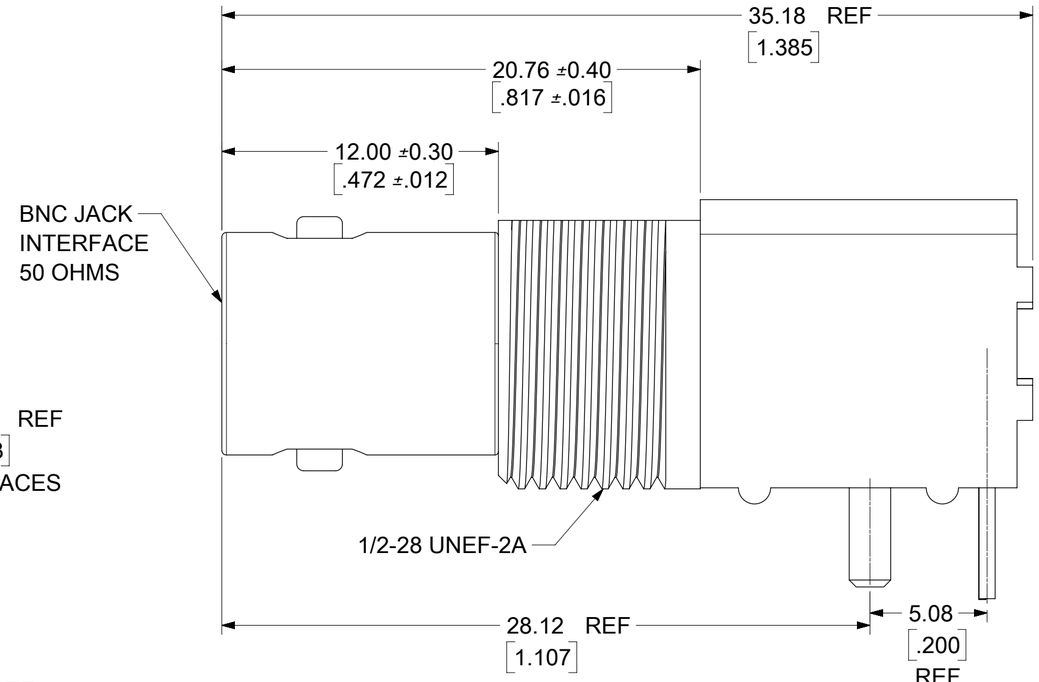

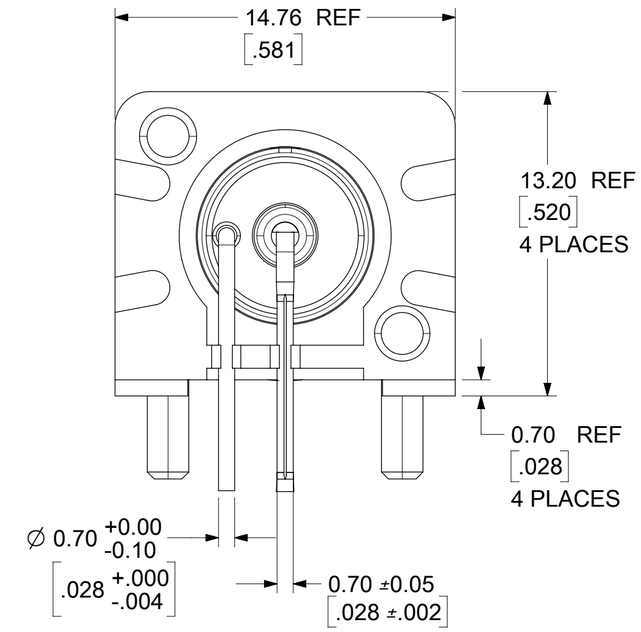

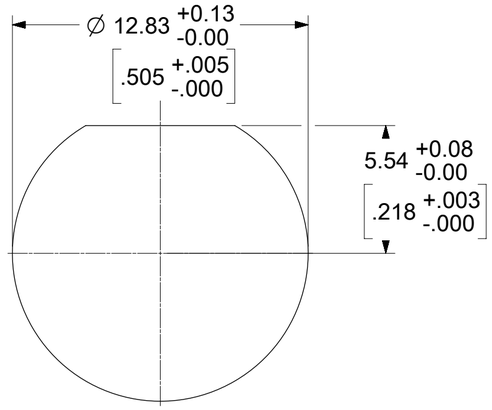

RECOMMENDED MOUNTING HOLE
MAXIMUM PANEL THICKNESS 5.5[.217]
RECOMMENDED MOUNTING TORQUE:
0.56 N-m (5 IN-LBS)

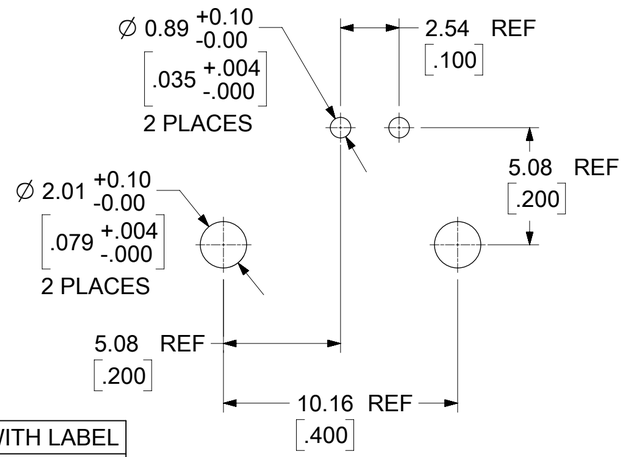

RECOMMENDED PCB LAYOUT

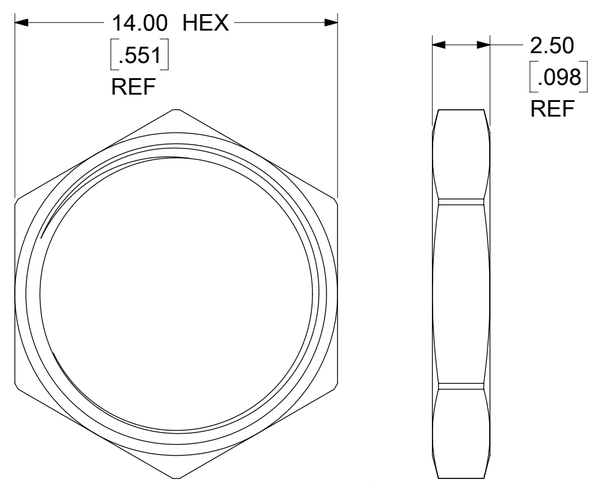

JAM NUT

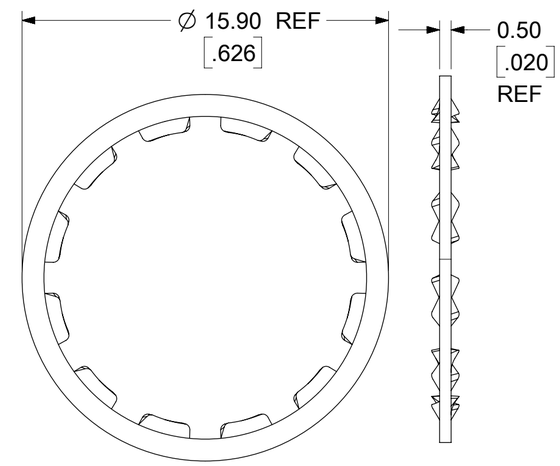

LOCKWASHER

PART NO.	PACKAGING
73171-4350	QYT (1) OF 73137-5003 IN SINGLE BAG WITH LABEL
73137-5003	BULK

SPECIFICATION	DESCRIPTION
PS-89675-1030	ELECTRO/MECH PERFORMANCE

THIS DRAWING CONTAINS INFORMATION THAT IS PROPRIETARY TO MOLEX ELECTRONIC TECHNOLOGIES, LLC AND SHOULD NOT BE USED WITHOUT WRITTEN PERMISSION

SYMBOLS: = 0

DIMENSION UNITS: MM/IN
SCALE: NTS

GENERAL TOLERANCES (UNLESS SPECIFIED)

	MM	INCH
4 PLACES	±	±
3 PLACES	±	± 0.005
2 PLACES	± 0.13	± 0.01
1 PLACE	± 0.25	±
0 PLACES	±	±
ANGULAR TOL	± 2.0 °	

DRAFT WHERE APPLICABLE MUST REMAIN WITHIN DIMENSIONS

CURRENT REV DESC:

EC NO: 614641
DRWN: SSSHAH 2019/03/19
CHK'D: LMEIER 2019/03/28
APPR: AROBERTSON 2019/03/28

INITIAL REVISION:
DRWN: BOMALLEY 2012/01/18
APPR: JWIENER 2012/02/06

THIRD ANGLE PROJECTION
DRAWING: C-SIZE
SERIES: 73137

molex

BNC JACK, R/A, PCB
RECEPTACLE, 50 OHMS BNC-JR, EWR-12952

PRODUCT CUSTOMER DRAWING

DOCUMENT NUMBER	DOC TYPE	DOC PART	REVISION
SD-73137-5003	PSD	001	G2

MATERIAL NUMBER	CUSTOMER	SHEET NUMBER
SEE TABLE		1 OF 1

DOCUMENT STATUS	P1	RELEASE DATE	2019/03/28 19:32:11

FORMAT: Eng-lega-master-tb-prod-C
REVISION: D
DATE: 2018/01/18