© – TE Connectivity. All Rights Reserved.

REVISIONS					
P	LTR	DESCRIPTION	DATE	DWN	APVD
	E3	REVISED PER ECR-22-159732	01DEC2022	DB	BW

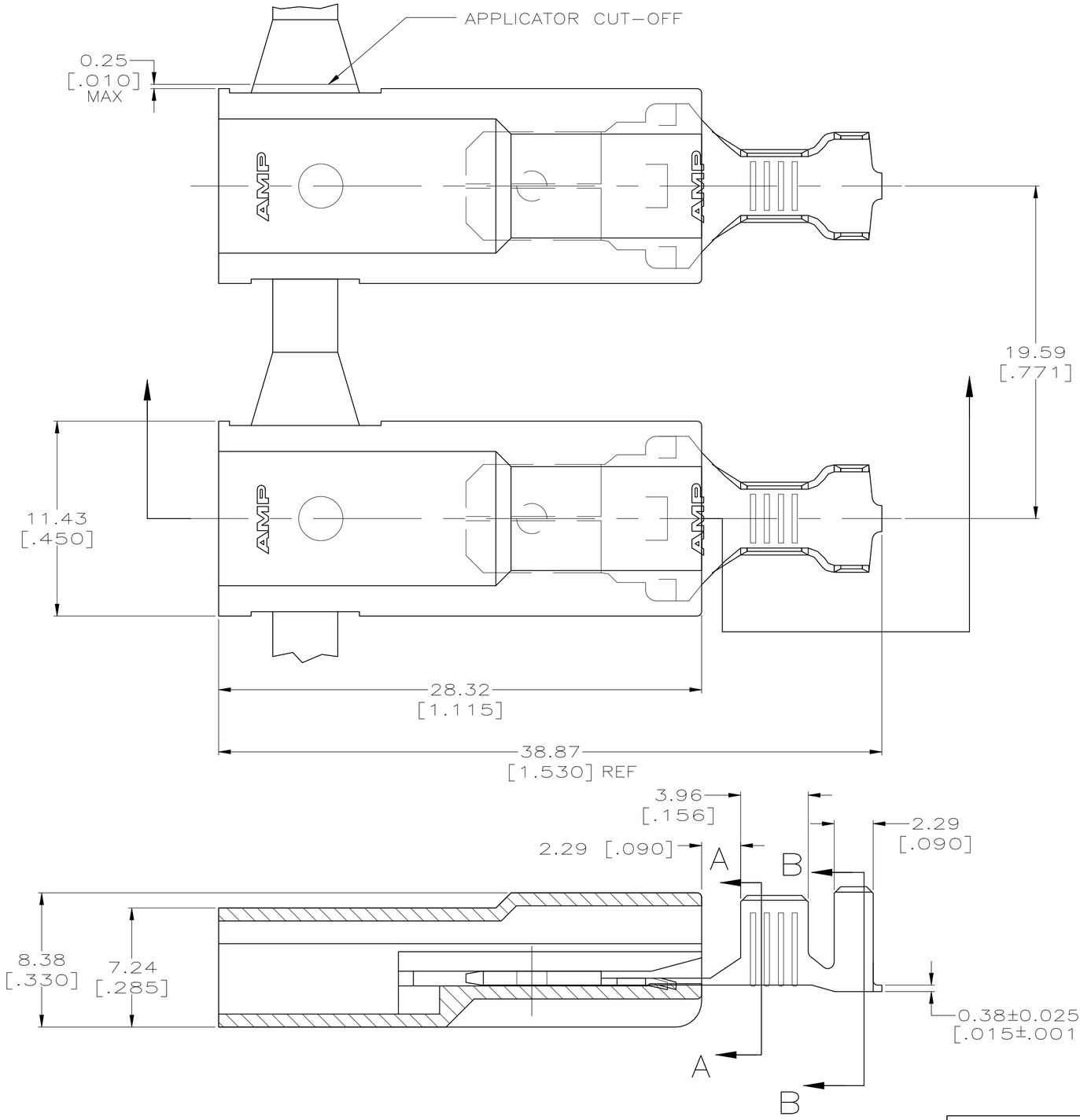

1 FASTON TAB BASE #1217247, ARE USED IN THIS PRODUCT.

2 WIRE SIZE IS [#12–#10] AWG COPPER STRANDED.

3 INSULATION RANGE IS 3.81–5.08 [.150–.200] DIA.

4 MATES WITH A 6.35 X 0.81 [.250 X .032] RECEPTACLE.

5 MATERIAL & FINISH
TERMINAL – BRASS, SEE TABLE
HOUSING – 6/6 NYLON, NATURAL

6 PRELIMINARY – NOT FOR PRODUCTION.

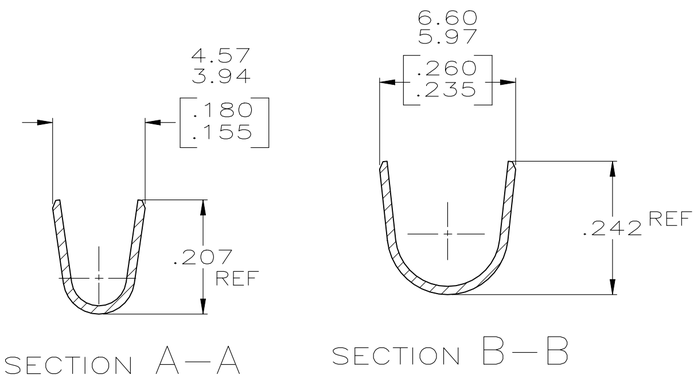

FINISH	PART NO.
NICKEL PLATE	521227-3 6
TIN PLATED	521227-2
–	~~521227-1~~

SUPERSEDED BY 521227-2

THIS DRAWING IS A CONTROLLED DOCUMENT.

DIMENSIONS: mm [INCHES]

TOLERANCES UNLESS OTHERWISE SPECIFIED:
0 PLC ± –
1 PLC ± –
2 PLC ± 0.25 [.010]
3 PLC ± –
4 PLC ± –
ANGLES ± –

MATERIAL 5
FINISH 5

DWN JR RUTH 20OCT99
CHK MS FEHER 20OCT99
APVD J HUMMEL 20OCT99
PRODUCT SPEC —
APPLICATION SPEC —
WEIGHT 0.000000
CUSTOMER DRAWING

TE Connectivity

NAME ASSEMBLY, TAB, ULTRA-POD, 6.35 [.250] SERIES

SIZE	CAGE CODE	DRAWING NO	RESTRICTED TO
A2	00779	C-521227	—

SCALE 5:1 SHEET 1 OF 1 REV E3

521227

1471-9 (1/15)