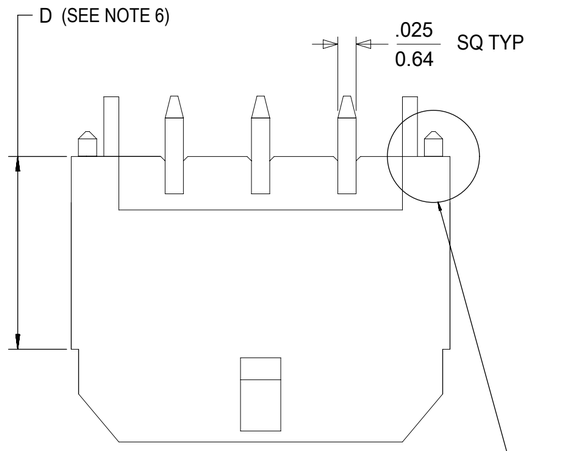

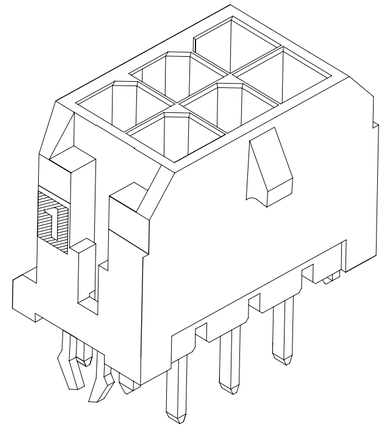

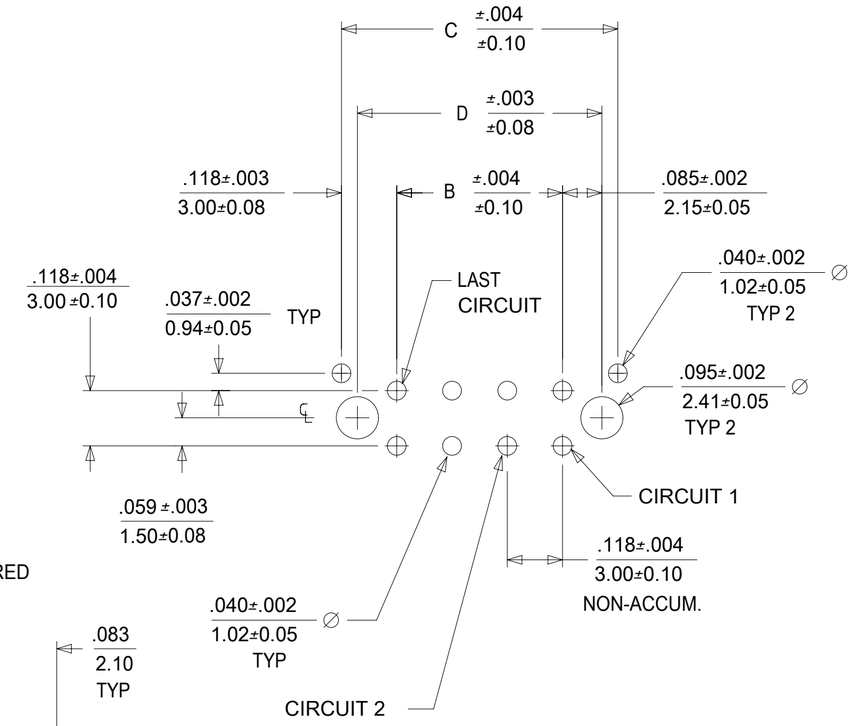

CKTS	A	B	C	D
02	.262 / 6.65	NA	.236 / 6.00	.169 / 4.30
04	.380 / 9.65	.118 / 3.00	.354 / 9.00	.287 / 7.30
06	.498 / 12.65	.236 / 6.00	.472 / 12.00	.405 / 10.30
08	.616 / 15.65	.354 / 9.00	.591 / 15.00	.524 / 13.30
10	.734 / 18.65	.472 / 12.00	.709 / 18.00	.642 / 16.30
12	.852 / 21.65	.591 / 15.00	.827 / 21.00	.760 / 19.30
14	.970 / 24.65	.709 / 18.00	.945 / 24.00	.878 / 22.30
16	1.088 / 27.65	.827 / 21.00	1.063 / 27.00	.996 / 25.30
18	1.206 / 30.65	.945 / 24.00	1.181 / 30.00	1.114 / 28.30
20	1.325 / 33.65	1.063 / 27.00	1.299 / 33.00	1.232 / 31.30
22	1.443 / 36.65	1.181 / 30.00	1.417 / 36.00	1.350 / 34.30
24	1.561 / 39.65	1.299 / 33.00	1.535 / 39.00	1.469 / 37.30

NOTE : (2) POLARIZATION PEGS ARE SHOWN.
HOWEVER, ASSEMBLIES MAY BE MANUFACTURED
WITH (1) PEG ONLY.

PCB LAYOUT: COMPONENT SIDE
RECOMMEND PCB THICKNESS: .062 / 1.57

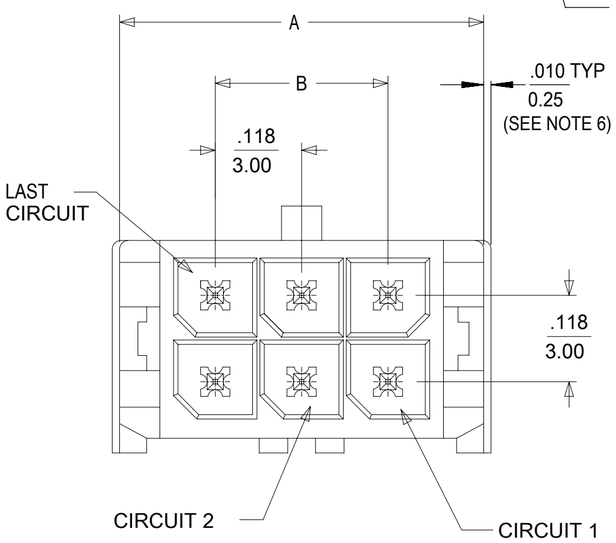

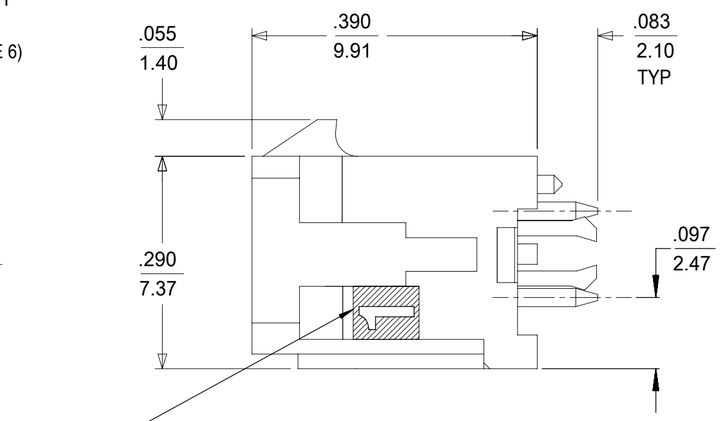

CIRCUIT "1" IDENTIFIED ON THIS SURFACE
(APPROX. LOCATION SHOWN FOR REF.)

	FINISH A	FINISH B	FINISH C	FINISH D
CKTS	MATERIAL NO:	MATERIAL NO:	MATERIAL NO:	MATERIAL NO:
02				43045-0305
04				43045-0505
06				43045-0705
08				43045-0905
10				43045-1105
12				43045-1305
14				43045-1505
16				43045-1705
18				43045-1905
20				43045-2105
22				43045-2305
24				43045-2505

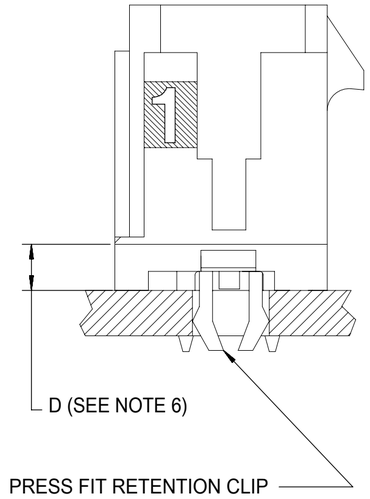

NOTES:

1. HOUSING MATERIAL: GLASS FILLED LIQUID CRYSTAL POLYMER, UL94V-0, COLOR-BLACK
   TERMINAL MATERIAL: BRASS ALLOY
2. FINISH: A = .000060/(0.00152) MIN. REFLOW MATTE TIN OVER .000050/(0.00127) MIN. NICKEL PLATE. (FINISH IS BRIGHT IN APPEARANCE, THICKNESS AS APPLIED PRIOR TO REFLOW)
   B = .000015/(0.00038) MIN. SELECT GOLD IN CONTACT AREA; .000100/(0.00254) MIN. SELECT MATTE TIN ON SOLDER TAILS; BOTH OVER .000050/(0.00127) MIN. NICKEL PLATE.
   C = .000030/(0.00076) MIN. SELECT GOLD IN CONTACT AREA; .000100/(0.00254) MIN. SELECT MATTE TIN ON SOLDER TAILS; BOTH OVER .000050/(0.00127) MIN. NICKEL PLATE.
   D = .000100/(0.00254) MIN. MATTE TIN OVER .000050/(0.00127) MIN. NICKEL PLATE.
3. PRODUCT SPECIFICATION: PS-43045
4. TRAY PACKAGED: SEE MOLEX DRAWING PK-70873-0314
5. MATES WITH MICRO FIT (3.0) RECEPTACLE SERIES 43025
6. CIRCUIT SIZES 2-6: "D" IS .265/6.74 FOR .010/0.25 STEP
   CIRCUIT SIZES 8-24: "D" IS .063/1.60 FOR .010/0.25 STEP.
7. THIS PART CONFORMS TO CLASS B REQUIREMENTS OF COSMETIC SPECIFICATION PS-45499-002.
8. TEXT ON PART IS FOR REFERENCE ONLY. TEXT AND TEXT LOCATION MAY VARY DEPENDING ON PART NUMBER AND/OR TOOL.

DOCUMENT STATUS	P1	RELEASE DATE	2019/02/20 15:58:01

SYMBOLS: FA = 0, FC = 0, FP = 0, S = 0, ▼ = 0, C = 0, ☒ = 0, ■ = 0, = 0

THIS DRAWING CONTAINS INFORMATION THAT IS PROPRIETARY TO MOLEX ELECTRONIC TECHNOLOGIES, LLC AND SHOULD NOT BE USED WITHOUT WRITTEN PERMISSION

DIMENSION UNITS: IN/MM — SCALE: NTS

GENERAL TOLERANCES (UNLESS SPECIFIED)

	MM	INCH
4 PLACES	±	±
3 PLACES	±	± 0.01
2 PLACES	± 0.25	± 0.014
1 PLACE	± 0.36	±
0 PLACES	±	±
ANGULAR TOL	± 0.5 °	

DRAFT WHERE APPLICABLE MUST REMAIN WITHIN DIMENSIONS

CURRENT REV DESC: FIX CLIP GEOMETRY

EC NO: 610852
DRWN: JEHRISMAN 2019/01/14
CHK'D: SSOUSEK 2019/02/13
APPR: FSMITH 2019/02/20
INITIAL REVISION:
DRWN: NNGUYEN 2014/01/24
APPR: FSMITH 2014/04/21

THIRD ANGLE PROJECTION | DRAWING: C-SIZE | SERIES: 43045

molex

MICRO FIT (3.0) DUAL ROW VERTICAL, SHORT TAIL, THRU HOLE, CLIPS

PRODUCT CUSTOMER DRAWING

DOCUMENT NUMBER	DOC TYPE	DOC PART	REVISION
SD-43045-041	PSD	001	A2

MATERIAL NUMBER	CUSTOMER	SHEET NUMBER
SEE CHART	GENERAL MARKET	1 OF 1

FORMAT: Eng-tega-master-tb-prod-C
REVISION: D
DATE: 2018/01/18