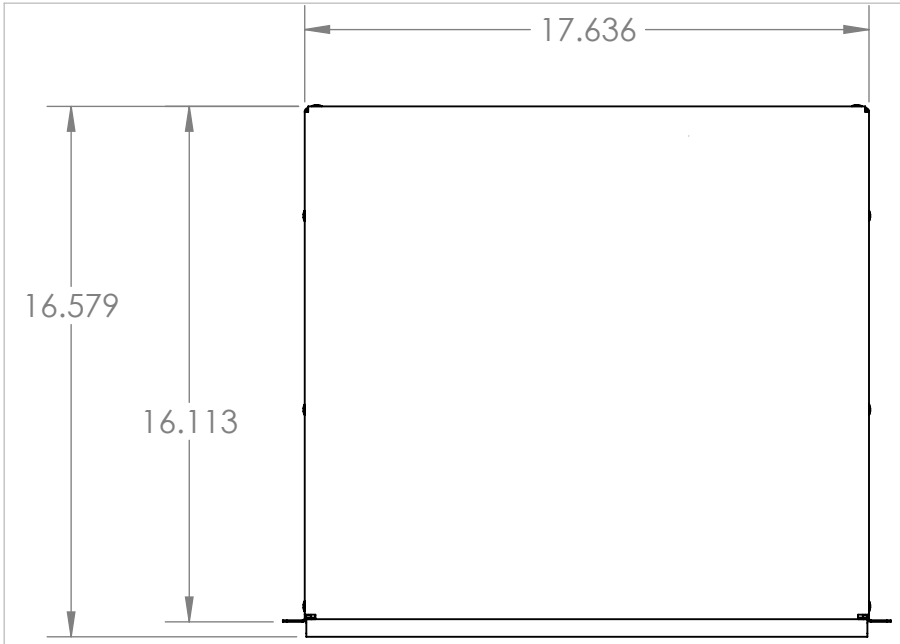

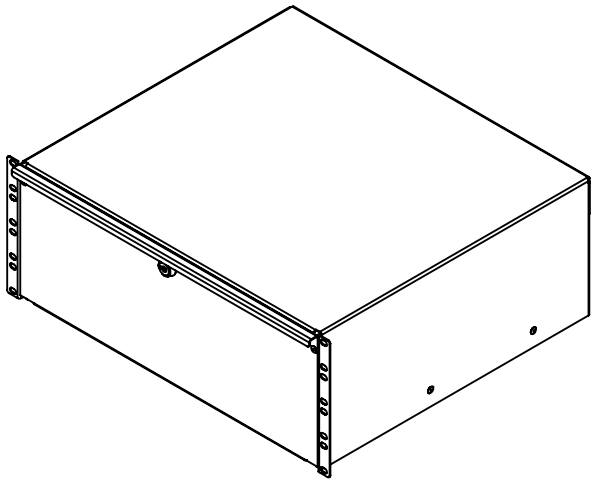

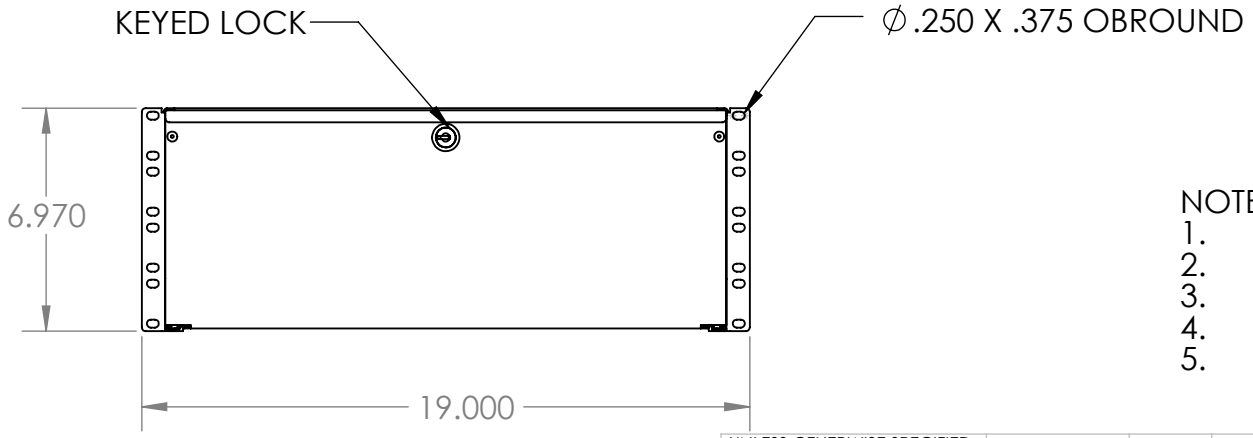

NOTE:
1. 19" EIA RACK MOUNT COMPLIANT.
2. 2-POINT MOUNT.
3. DRAWER OPENS 13.78".
4. BLACK POWDER COAT.
5. INTERNAL DIMENSIONS:
   16.44W X 15.90D X 6.20H

WEB PRINT

NEXT ASSY	USED ON
APPLICATION	

PROPRIETARY AND CONFIDENTIAL
THE INFORMATION CONTAINED IN THIS DRAWING IS THE SOLE PROPERTY OF KENDALL HOWARD. ANY REPRODUCTION IN PART OR AS A WHOLE WITHOUT THE WRITTEN PERMISSION OFKENDALL HOWARD IS STRICTLY PROHIBITED.

UNLESS OTHERWISE SPECIFIED:
DIMENSIONS ARE IN INCHES
TOLERANCES:
FRACTIONAL ±1/8
ANGULAR: BEND ±1DEGREE
TWO PLACE DECIMAL ±.03
THREE PLACE DECIMAL ±.01

Surface Area

MATERIAL

FINISH

DO NOT SCALE DRAWING

	NAME	DATE
DRAWN	BS	03/18/2014
CHECKED		
ENG APPR.		
MFG APPR.		
Q.A.		

COMMENTS:

KENDALL HOWARD

TITLE:
4U RACK MOUNTABLE DRAWER

SIZE	DWG. NO.	REV
A	1922-3-100-04 WP	A

SCALE: 1:7 | WEIGHT: 19.31 | SHEET 1 OF 1

5 4 3 2 1