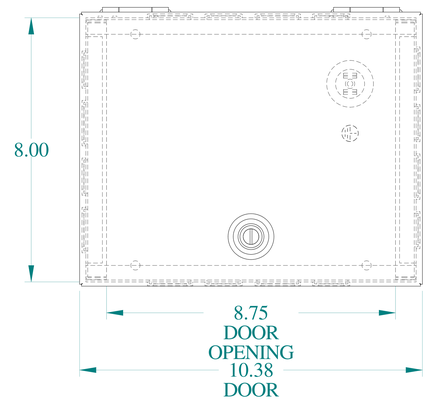

TOP VIEW

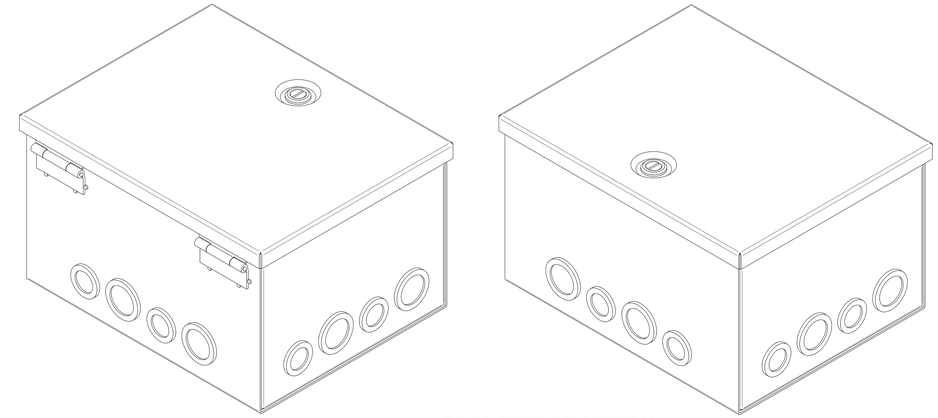

ISOMETRIC VIEWS

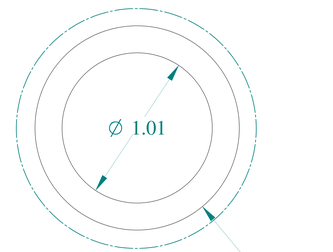

DETAIL Z
TYP

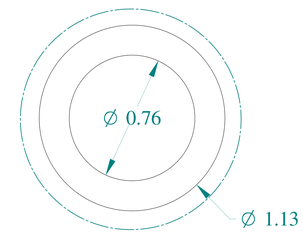

DETAIL Y
TYP

SIDE VIEW

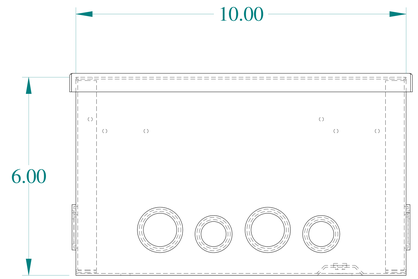

FRONT VIEW

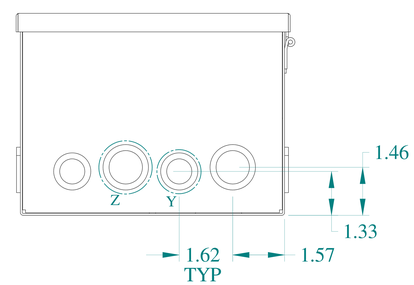

SIDE VIEW

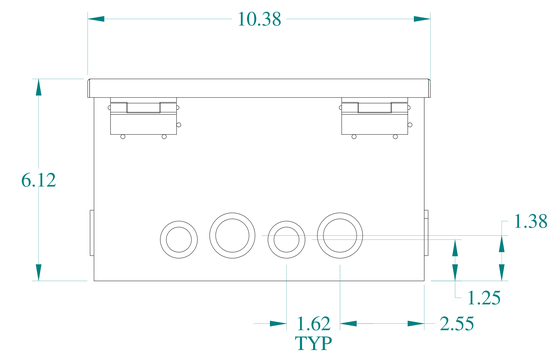

BACK VIEW

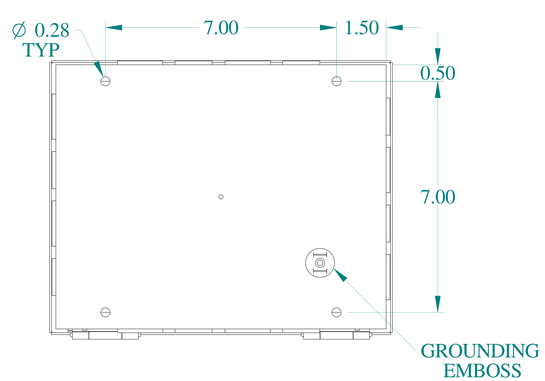

BOTTOM VIEW

HAMMOND MANUFACTURING®

www.hammondmfg.com

Data subject to change without notice.

Part # : CHKO1086	Date : Mar. 23, 2019

Link:www.hammfg.com/CHKO1086