NOTES:
1. MATERIALS AND FINISHES:
   FRONT BODY - BRASS, NICKEL PLATING (.000100" MIN THICK)
   REAR CUBE BODY - BRASS, MATTE TIN PLATING (.000100" MIN THICK)
   FEMALE CONTACT - BERYLLIUM COPPER, GOLD PLATING (.000030" MIN THICK)
   INSULATOR - PTFE
2. ELECTRICAL:
   A. IMPEDANCE: 75 OHM
   B. FREQUENCY RANGE: DC - 1 GHz
   C. VSWR(RETURN LOSS): 1.12 (25dB), MAX @ DC - 1.5 GHz
      1.22 (20dB), MAX @ 1.5 - 3 GHz
      VSWR PERFORMANCE DEPENDANT UPON PCB LAUNCH CONFIGURATION
   D. DIELECTRIC WITHSTANDING VOLTAGE: 1000 VRMS
4. PACKAGING:
   A. QUANTITY: TRAY PACK
   B. MARKING: TRAY TO BE MARKED
      "AMPHENOL, 31-70352, AND DATE CODE"

THIRD ANGLE PROJ.

REVISIONS

REV	DESCRIPTION	DATE	ECO	APPR
A	RELEASE TO MFG.	11/9/07	46835	SH
B	ADD STAKING TWO PLACES/RD-DMI2050401J7	30-May-12	49112	SH
C	REVISED DESIGN TO MEET 1000 VRMS DWV \RD-DMI6050501T1	18-May-16	00801	JTS

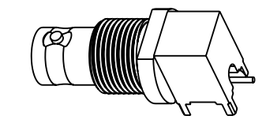

SCALE 1.000

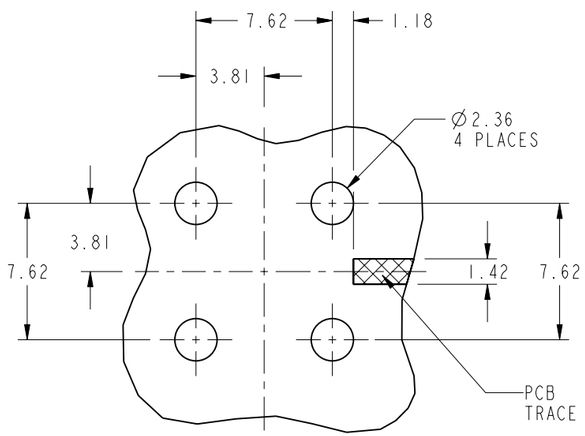

RECOMMENDED
PCB FOOTPRINT
SCALE 3.000

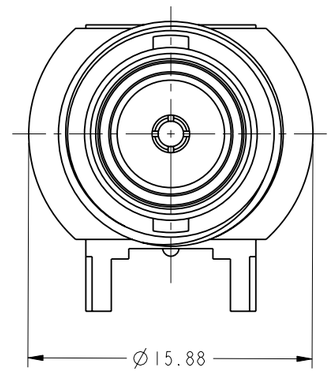

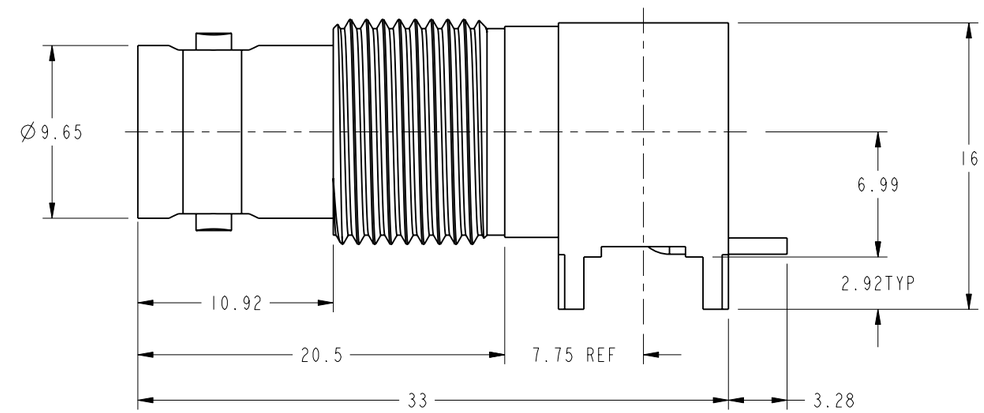

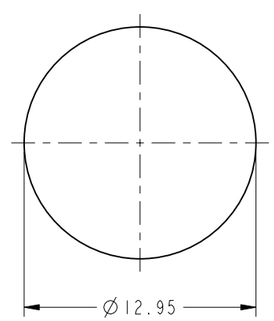

RECOMMENDED
PANEL HOLE
SCALE 3.000

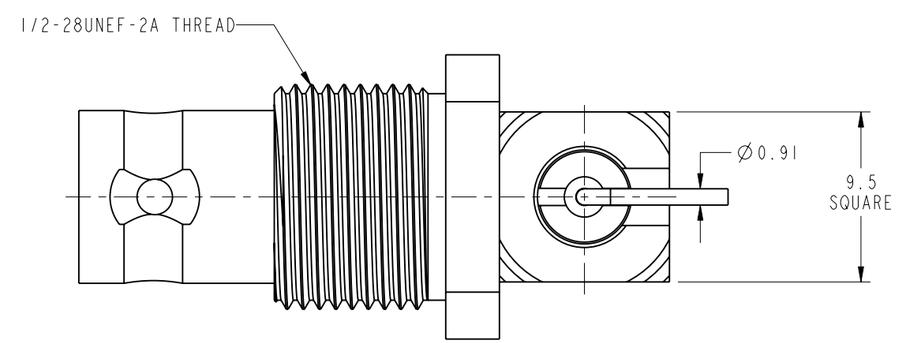

CUSTOMER OUTLINE DRAWING

ALL OTHER SHEETS ARE FOR INTERNAL USE ONLY

UNLESS OTHERWISE SPECIFIED, DIMENSIONS ARE IN METRIC AND TOLERANCES ARE:

<0.5mm	0.5 - 6mm	6 - 30mm	30 - 120mm	ANGLES
± 0.05mm	±0.1mm	±0.2mm	± 0.3mm	±1°

NOTICE - These drawings, specifications, or other data (1) are, and remain the property of Amphenol corp. (2) must be returned upon requiest; and (3) arre confidential and not to be disclosed to any person other than those to whom they are given by Amphenol Corp. the funishing of these drawings, specifications, or other data by Amphenol Corp., or to any other person to anyone for any purpose is not to be regarded by implicatioin or otherwise in any manner licensing, granting rights to permitting such holder or any other sperson to manufacture, use or sell any product, process or design, patented or otherwsie, that may in any way be related to or disclosed by said drawings, specifications, or other data.

MATERIAL

REFERENCE

TEKTRONIX PN: 131-8271-00

FINISH

DRAWN TANGOR	DATE 18-May-16	TITLE BNC R/A PCB JACK THRU LEG, SMT CONTACT BULKHEAD	Amphenol RF Danbury CT USA, Tainan, Taiwan, Shenzhen, China www.amphenolrf.com
ENGINEER M. HOYACK	DATE 31-Oct-07		
APPROVED S.HSIEH	DATE 18-May-16	SCALE: 3.0:1.0 SHEET 2 OF 2	DRAWING NO. 31-70352
CAD FILE 1:BNC/31-70352		DWG SIZE B / REV C	ITEM NO. 31-70352
			PART NO. 31-70352