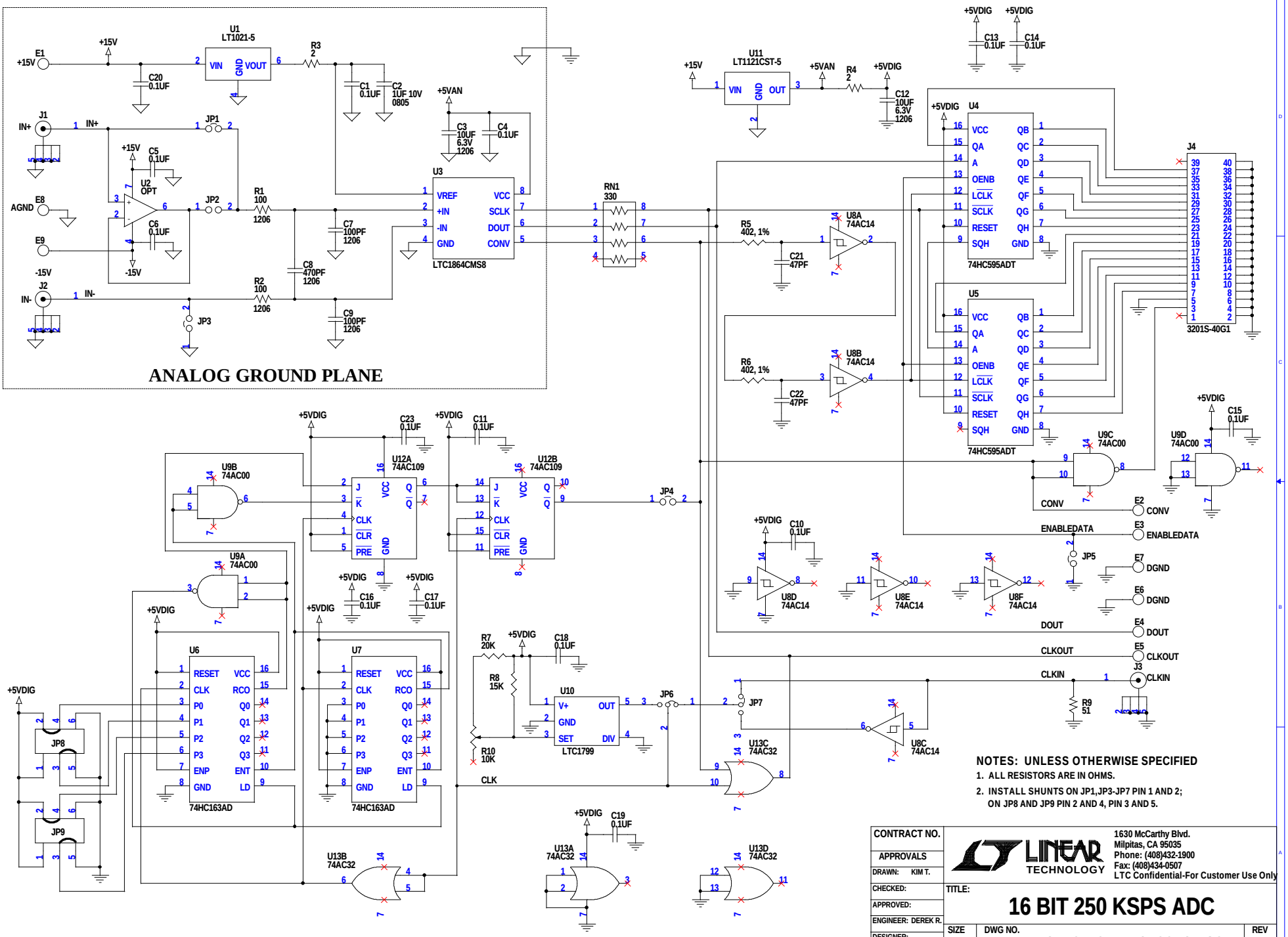
ANALOG GROUND PLANE
U1 LT1021-5
U2 OPT
U3 LTC1864CMS8
U4 74HC595ADT
U5 74HC595ADT
U6 74HC163AD
U7 74HC163AD
U10 LTC1799
U11 LT1121CST-5
J4 3201S-40G1
NOTES: UNLESS OTHERWISE SPECIFIED
1. ALL RESISTORS ARE IN OHMS.
2. INSTALL SHUNTS ON JP1,JP3-JP7 PIN 1 AND 2;
ON JP8 AND JP9 PIN 2 AND 4, PIN 3 AND 5.
CONTRACT NO.
APPROVALS
DRAWN: KIM T.
CHECKED:
APPROVED:
ENGINEER: DEREK R.
DESIGNER:
LINEAR TECHNOLOGY
1630 McCarthy Blvd.
Milpitas, CA 95035
Phone: (408)432-1900
Fax: (408)434-0507
LTC Confidential-For Customer Use Only
TITLE:
16 BIT 250 KSPS ADC
SIZE A
DWG NO. DC416A-2 * LTC1864CMS8
REV A
DATE: Wednesday, February 06, 20 02
SHEET 1 OF 1