KYCON, Inc. 305 Digital Drive, Morgan Hill, CA 95037 (408)494-0330

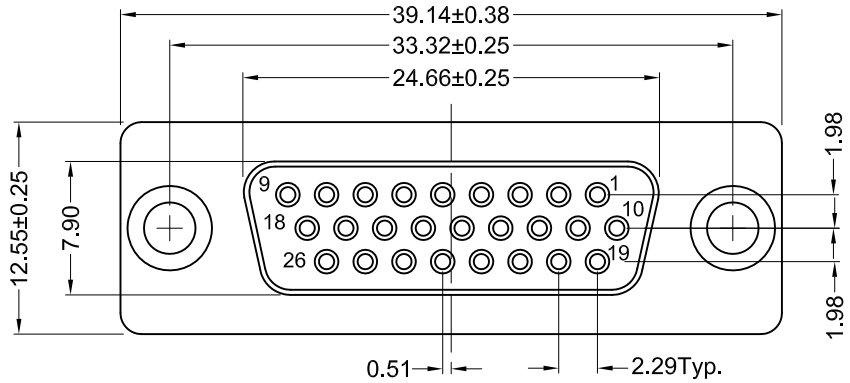

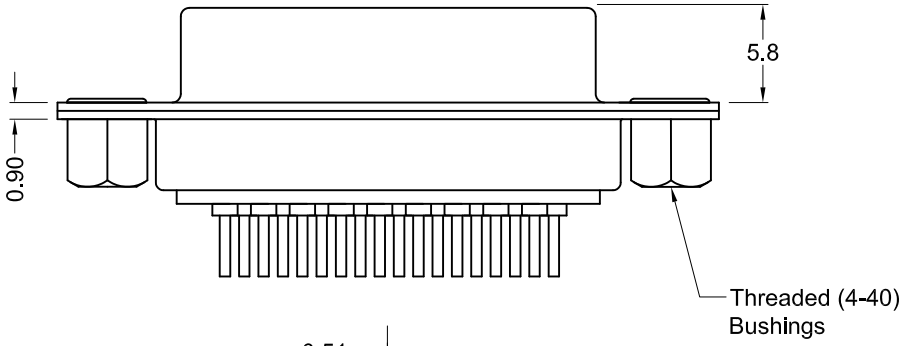

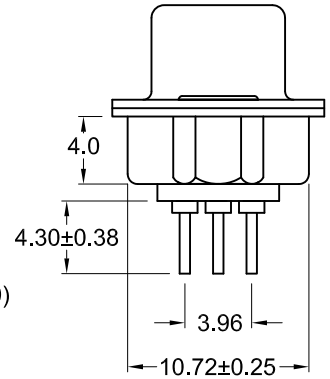

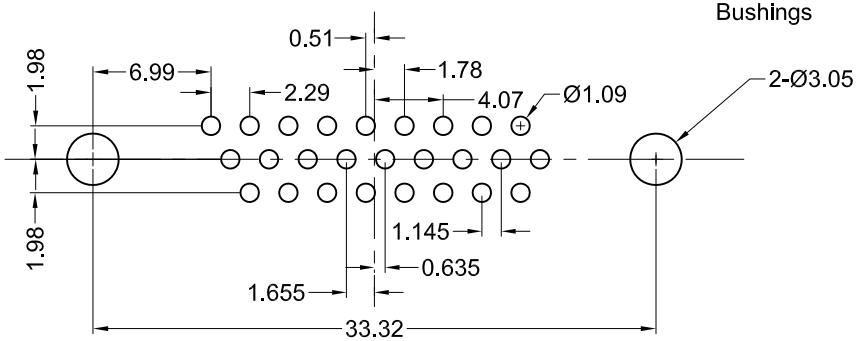

Recommended PCB Layout
(Top View)

Material and Finish

Shell: Steel, Nickel plated

Insulator: PBT thermoplastic with glass-fiber reinforcement, UL94V-0 rated
Color: Black

Contact Material:
Socket - Brass

Contact Plating Options:

Standard: gold flash on mating end, tin on termination end, nickel underplate on entire contact

15 Option: 15u" gold on mating end, tin on termination end, nickel underplate on entire contact

30 Option: 30u" gold on mating end, tin on termination end, nickel underplate on entire contact

Electrical Specifications

Rated Current: 1.5A

Rated Voltage: 30Vac

Insulation Resistance:
more than 1000 megohms at 500V DC

Contact Resistance:
13 milliohms max.

Dielectric Withstanding Voltage:
1000V for 1 minute

Operating Temperature:
-55°C to +75°C

Ordering Information

Part Number	Contact Area Plating Finish
K86X-AD-26S-K	Gold Flash (standard)
K86X-AD-26S-K15	15u" Gold (15 option)
K86X-AD-26S-K30	30u" Gold (30 option)

RoHS COMPLIANT

E140125

LR78160

Tolerances
X.X ± 0.25
X.XX ± 0.15
Unless Stated Otherwise

REV.	DATE	DESCRIPTION	REV. BY	CHK. BY
A1	11/26/07	New Drawing	WILL H.	H. MA
A2	1/16/08	ECO# 07-052	WILL H.	H.MA
A3	8/29/14	ECO# 14-028	H. MA	P. DalCanto
A4	12/31/17	ECO# 17-033	G. Serrato	C. Furumasu

DRAWN BY	DATE
Will H.	11/26/07
UNITS	
mm	

K86X-AD-26S-K

High Density, D-Sub, Vertical Mount,RoHS Compliant

26 pin socket, K Option

KYCON