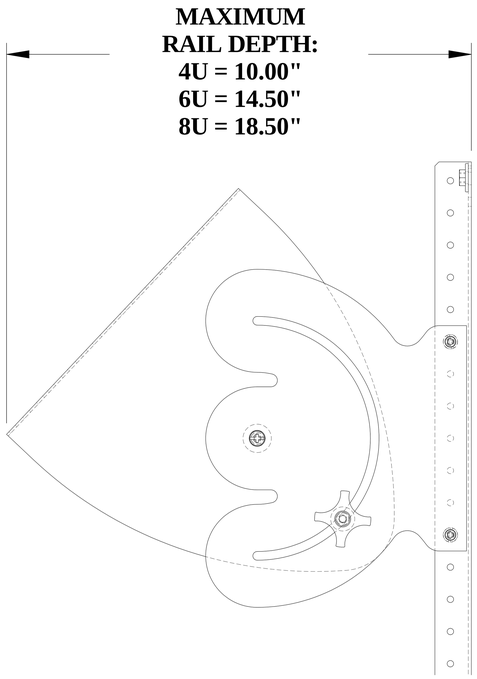

HLP_UR MOUNTED TO ERP

(SOLD SEPARATELY)

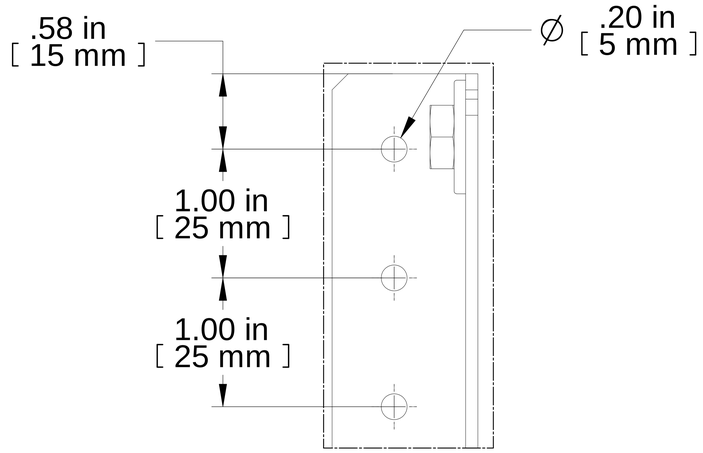

DETAIL A

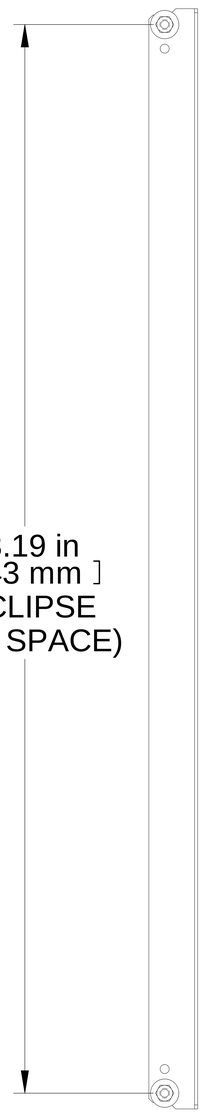

FRONT VIEW

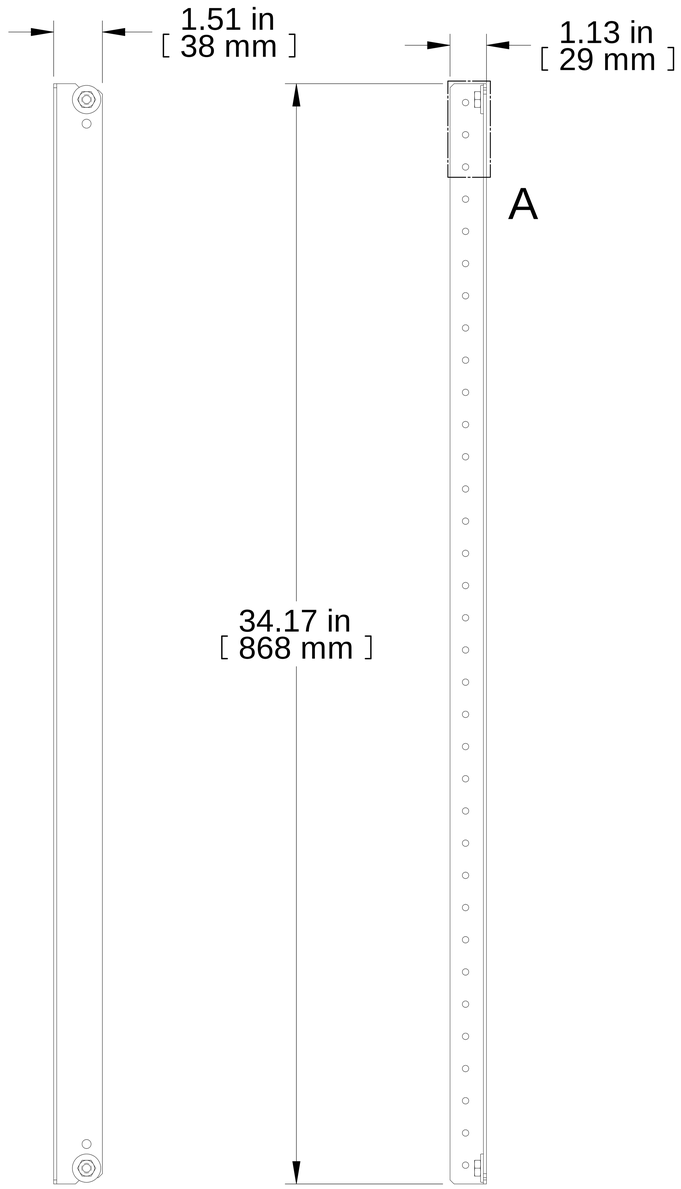

R.S. VIEW

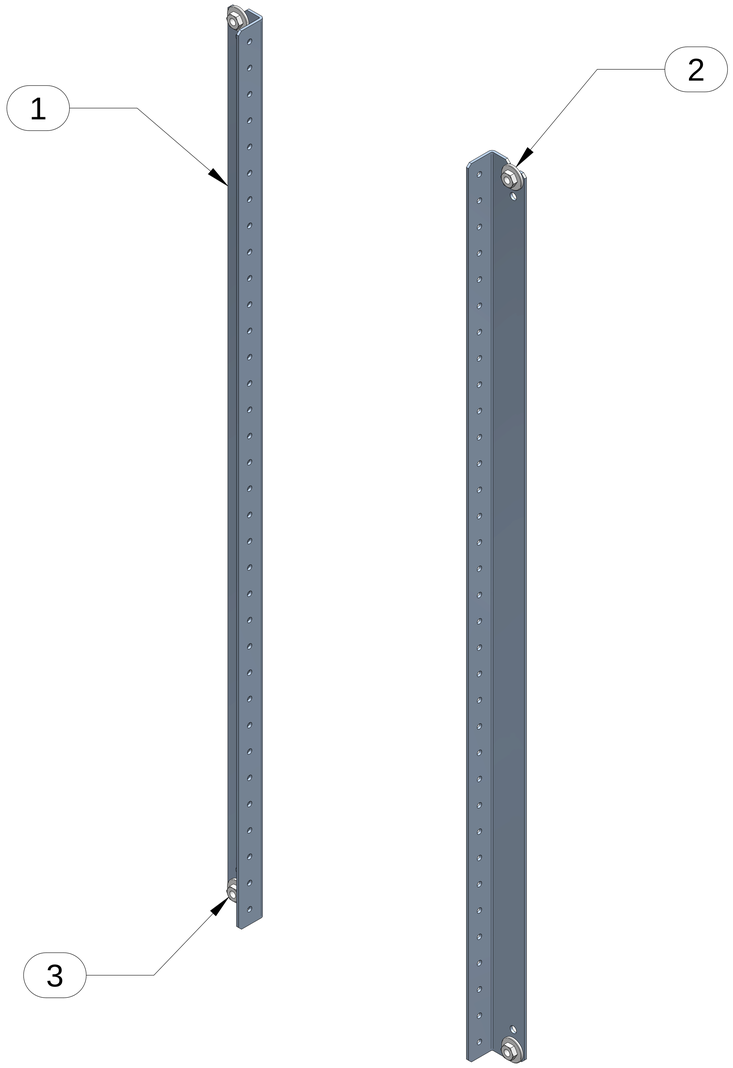

ISOMETRIC
(PAIR)

Item Number	Title	Quantity
1	36" ECLIPSE MTG RAIL	2
2	WASHER FLAT 5/16 IN ZP	4
3	5/16-18 HEX NUT	4

PART NUMBERS

ERP3624	PAINTED BLACK TEXTURED

NOTES

Sold In Pairs
Mounting Hardware for Eclipse Series Includ.
See Hammond Website for More Information

Français

Pour tous les détails sur nos produits,
svp veuillez consulter notre site www.hammondmfg.com

Data subject to change without notice. Isometric drawing not to scale.
Les données sont sujettes à changement sans préavis.

HAMMOND MANUFACTURING®

www.hammondmfg.com

PART NO. **ERP3624**