REVISIONS			
REV	DESCRIPTION	DATE	BY

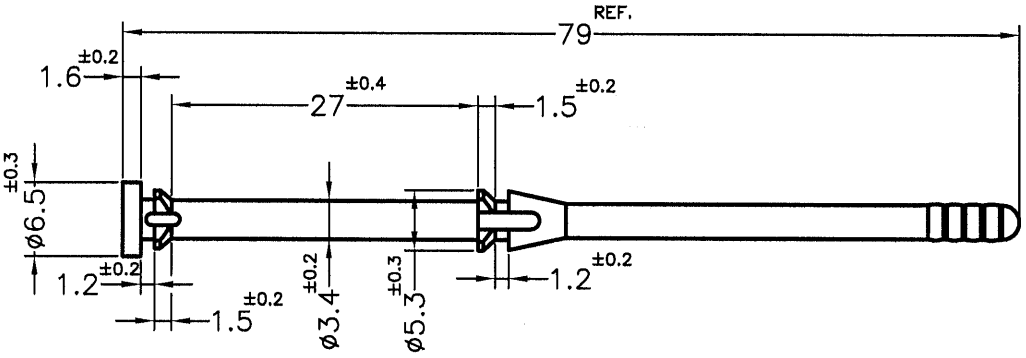

MOUNTING HOLE : ø3.6mm

PART NO.	HARDNESS	COLOR
BUB-79G(B)	45°±10°	BLACK
BUB-79H(B)	55°±10°	
BUB-79H(W)		WHITE
BUB-79	80°±10°	BLACK

NOTE:MADE OF EQUIVALENT MATERIAL.
使用同等材質

康揚企業股份有限公司
KANG YANG HARDWARE ENTERPRISE CO., LTD.
康揚塑膠(東莞)有限公司
KANG YANG PLASTIC(DONG GUAN)CO.,LTD.
康哲電腦配件(吳江)有限公司
KANG CHE COMPUTER COMPONENTS(WUJIANG) CO.,LTD.
ISO 9001
ISO 14001
QC 080000

TITLE	FAN SNAP RIVET	SPEC. DWG.	
MATERIAL	TPE	DATE	2007.10.15
HARDNESS	SEE ABOVE	DRAWN	Lung
COLOR	SEE ABOVE	CHECK	林益建
UNLESS OTHERWISE SPECIFIED TOLERANCE	SEE ABOVE	APPROVED	Kang
PART NUMBER	SEE ABOVE	DRAWING NUMBER	BUB-79
SIZE A4	SCALE 3:2	UNIT mm	REV C