MODEL NO.	PACKAGING
134-1000-005	ONE PCS PER BAG

REV	ECO	DATE
001	ECO-17-0032	11/28/2017
002	ECO-18-0020	08/21/2018

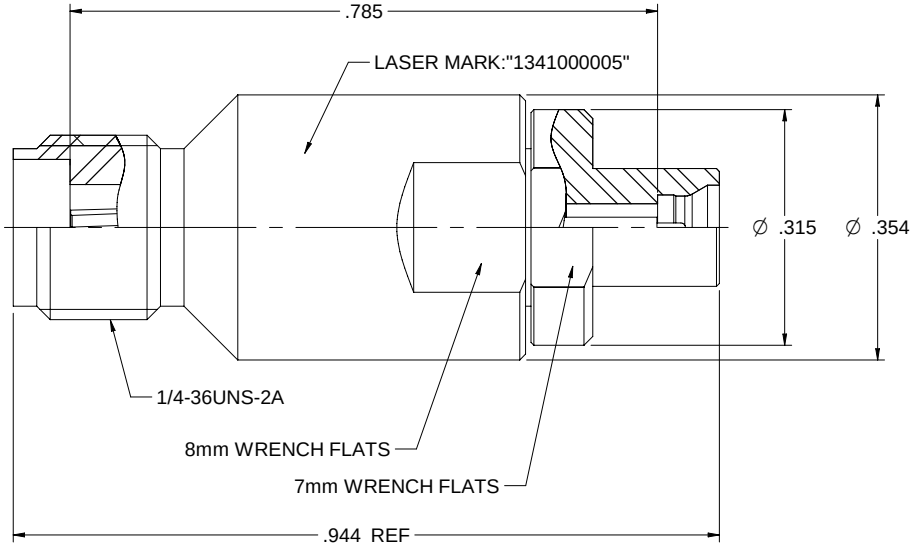

NOTES: UNLESS OTHERWISE SPECIFIED

1. MATERIAL & FINISH:
   1.1 BODY& COTACT BODY: PASSIVATED STAINLESS STEEL
   1.2 CONTACT PIN: GOLD PLATED BERYLLIUM COPPER
   1.3 INSULATOR1: ULTEM1000 AMBER
   1.4 INSULATOR2: PTFE WHITE

2. ELECTRICAL:
   2.1 IMPEDANCE: 50 OHMS
   2.2 FREQUENCY RANGE: DC-40 GHz
   2.3 VOLTAGE STANDING WAVE RATIO: 1.3 MAX
   2.4 DIELECTRIC WITHSTANDING VOLTAGE: 325 VRMS MIN
   2.5 CONTACT RESISTANCE:
      2.5.1 CENTER CONTACT: 6 MILLIOHM MAX
      2.5.2 OUTER CONTACT: 2 MILLIOHM MAX
   2.6 INSULATOR RESISTANCE: 5000 MEGOHM MIN

3. MECHANICAL:
   3.1 ENGAGEMENT FORCE: 0.23 NM MAX (2.92MM);FULL DETENT 19 N MAX (SMPM)
   3.2 DISENGAGEMENT FORCE: 0.23 NM MAX (2.92MM); FULL DETENT 29 N MAX (SMPM)
   3.3 CONTACT RETENTION: 22 N MIN
   3.4 DURABILITY: 500 CYCLES (2.92MM); FULL DETENT: 100 CYCLES MIN(SMPM)

4. ENVIRONMENT:
   4.1 THERMAL SHOCK: MIL-STD-202, METHOD 107, CONDITION B.
   4.2 OPERATING TEMPERATURE: -65 TO 165°C
   4.3 SHOCK: MIL-STD-202, METHOD 213, CONDITION I
   4.4 VIBRATION: MIL-STD-202, METHOD 204, CONDITION D
   4.5 MOISTURE RESISTANCE: MIL-STD-202, METHOD 106

This PROPRIETARY Document is property of Cinch Connectivity Solutions. Unauthorized use or disclosure of this document without written permission is prohibited. Violators will be held responsible for all damages incurred by Cinch Connectivity Solutions and its affiliates. Non-Binding.
INTERPRETATION OF DRAWING IS ACCORDANCE WITH ASME Y14.5-2009.

Model No. 134-1000-005		Johnson
RoHS2 ☑ 2011/65/EU	Cage Code	Title: ADAPTER ASSEMBLY,2.92mm(SMK) JACK TO SMPM PLUG
UNLESS OTHERWISE SPECIFIED UNITS INCH	3RD ANGLE PROJECTION	Drawing No. 134-1000-005 Rev. 002
.XXX ±.02 .XXXX ±.01 ANGLES ±5°	Drawn By: Betty.Yu	Size C · DO NOT SCALE DRAWING · Workmanship Std: NONE · Sheet 1 of 1
	Date 08/27/2018	