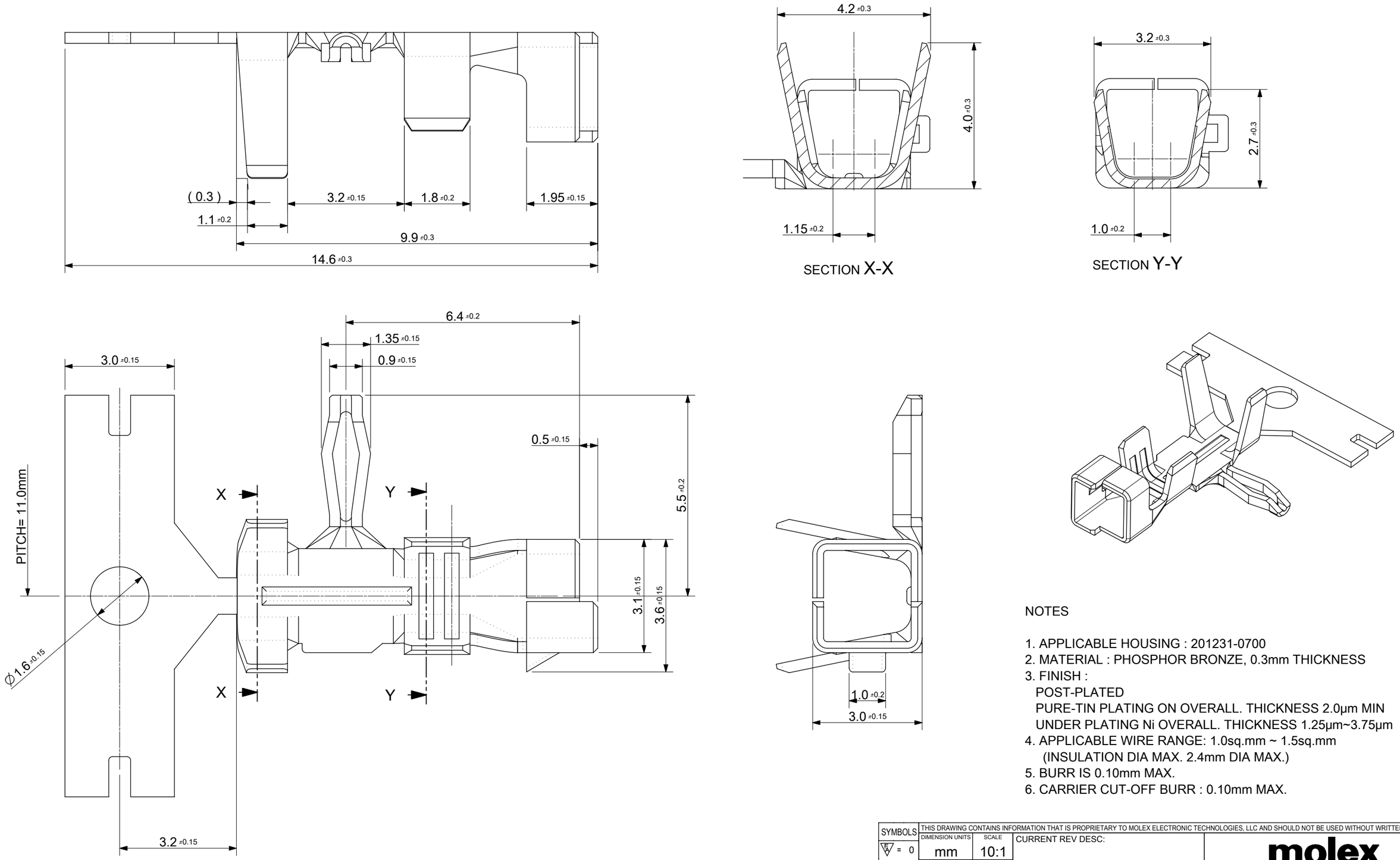

NOTES

1. APPLICABLE HOUSING : 201231-0700
2. MATERIAL : PHOSPHOR BRONZE, 0.3mm THICKNESS
3. FINISH :
   POST-PLATED
   PURE-TIN PLATING ON OVERALL. THICKNESS 2.0μm MIN
   UNDER PLATING Ni OVERALL. THICKNESS 1.25μm~3.75μm
4. APPLICABLE WIRE RANGE: 1.0sq.mm ~ 1.5sq.mm
   (INSULATION DIA MAX. 2.4mm DIA MAX.)
5. BURR IS 0.10mm MAX.
6. CARRIER CUT-OFF BURR : 0.10mm MAX.

SYMBOLS			
F = 0			
E = 0			
B = 0			
S = 0			
▽ = 0			
C = 0			
☒ = 0			
■ = 0			
▽ = 0			

THIS DRAWING CONTAINS INFORMATION THAT IS PROPRIETARY TO MOLEX ELECTRONIC TECHNOLOGIES, LLC AND SHOULD NOT BE USED WITHOUT WRITTEN PERMISSION

DIMENSION UNITS	SCALE
mm	10:1

GENERAL TOLERANCES (UNLESS SPECIFIED)

ANGULAR TOL	± °
4 PLACES	±
3 PLACES	±
2 PLACES	±
1 PLACE	±
0 PLACES	±

DRAFT WHERE APPLICABLE MUST REMAIN WITHIN DIMENSIONS

CURRENT REV DESC:

EC NO:	606063	
DRWN:	JSSHIN	2018/10/11
CHK'D:	SHCHU	2018/10/30
APPR:	YSKIM02	2018/10/30

INITIAL REVISION:

DRWN:	SCHONG03	2017/01/18
APPR:	YSKIM02	2017/01/31

THIRD ANGLE PROJECTION

DRAWING	SERIES
A3-SIZE	201231

molex

HYBRID BOARD IN CONN. POWER TERMINAL

PRODUCT CUSTOMER DRAWING

DOCUMENT NUMBER	DOC TYPE	DOC PART	REVISION
2012318003	PSD	000	A2

MATERIAL NUMBER	CUSTOMER	SHEET NUMBER
2012318003	GENERAL	1 OF 1

DOCUMENT STATUS		RELEASE DATE	

FORMAT: master-tb-mod-A3
REVISION: H
DATE: 2018/01/18