THIS DRAWING IS UNPUBLISHED. RELEASED FOR PUBLICATION 2006
© COPYRIGHT 2006 BY - ALL RIGHTS RESERVED.

REVISIONS

P	LTR	DESCRIPTION	DATE	DWN	APVD
	B5	PN 29 and 30 added ECR-08-029639	25NOV2008	SR	PF
	B6	table changed ECR-09-005558	10MAR2009	SR	AR
	C1	ECR-16-015318	17AUG2017	GR	MKO
	C2	REVISED PER ECR-17-013084	08JAN2018	NC	MKO

PANEL CUT-OUT

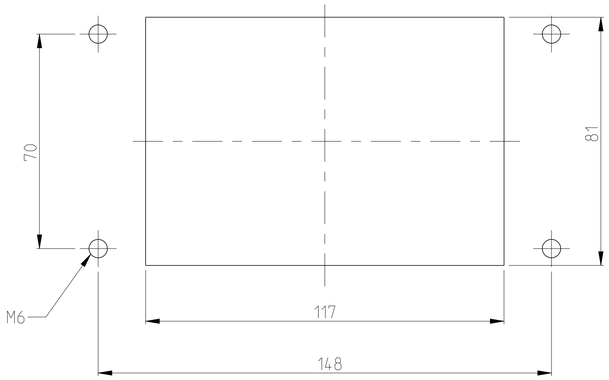

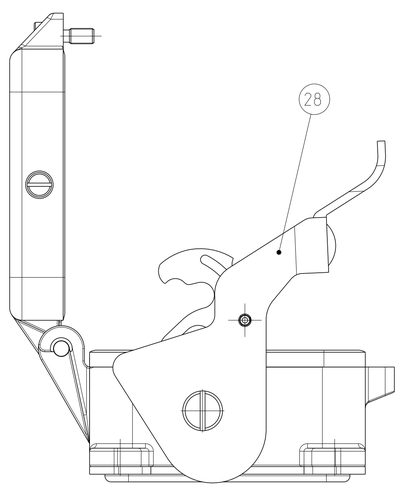

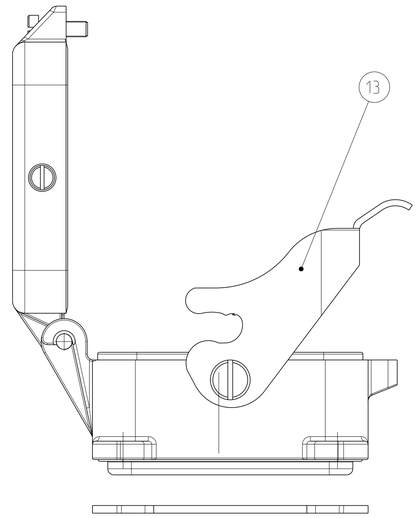

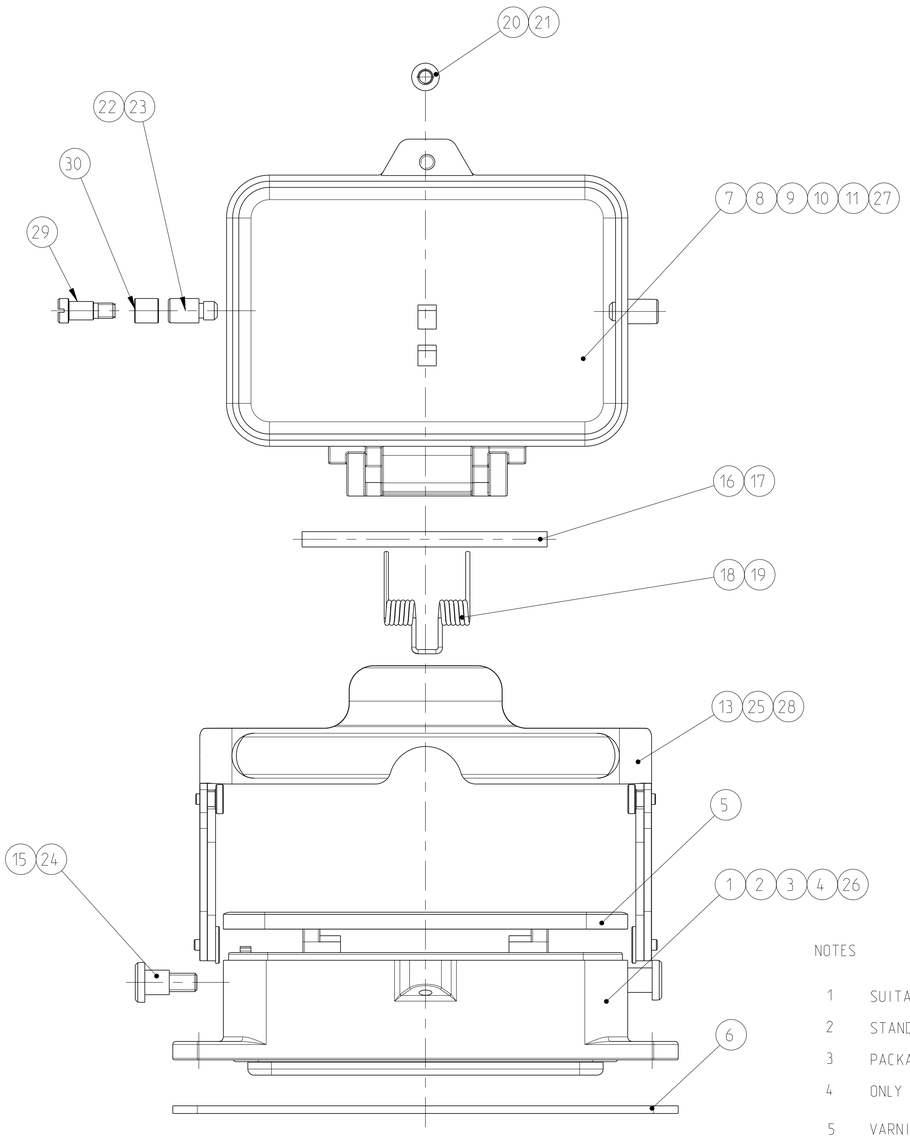

		OBSOLETE		OBSOLETE		OBSOLETE								
	2								SLIDE SPOOL HB.48	X6CrMoS17	BLANC		30	
	2								CLIP BOLT	STAINLESS STEEL	BLANC		29	M5
	1					1			SIDE CLIP STÄUBLI	STAINLESS STEEL	BLANC		28	
	1								COVER	ALUMINIUM		GREY	27	NEUTRAL, M5 - THREAD
	1								SURFACE MOUNTED HOUSING BOTTOM ENTRY	ALUMINIUM		GREY	26	NEUTRAL, MILLED (B5)
			1	1				1	SIDE CLIP	STEEL	ZINK PLATED	BLUE	25	PURCHASED PART FA. WALTER
			2	2				2	CROSS RECES PAN HEAD SCREW	STEEL	ZINK PLATED	BLUE	24	M6x8.4
							2		CLIP BOLT	STAINLESS STEEL	BLANC		23	
(B5)	2		2						CLIP BOLT	STEEL	ZINK PLATED	BLUE	22	
		1							CYLINDER SCREW	STAINLESS STEEL	BLANC		21	M5x16
					1	1		1	CYLINDER SCREW	STEEL	ZINK PLATED	BLUE	20	M5x16
		1					1		LEG SPRING	STAINLESS STEEL	BLANC		19	
	1		1	1	1			1	LEG SPRING	STEEL	ZINK PLATED	BLUE	18	
		1					1		RIVET PIN	STAINLESS STEEL	BLANC		17	5x80
	1		1	1	1			1	RIVET PIN	STEEL	ZINK PLATED	BLUE	16	5x80
	2	2				2	2		CROSS RECES PAN HEAD SCREW	STAINLESS STEEL	BLANC		15	M6x8
SUPERSEDED						1			~~SIDE CLIP~~	~~STEEL~~	~~ZINK PLATED~~	~~BLUE~~	~~14~~	~~SONDER~~
		1					1		SIDE CLIP	STAINLESS STEEL	BLANC		13	
SUPERSEDED			1	1				1	~~SIDE CLIP~~	~~STEEL~~	~~ZINK PLATED~~	~~BLUE~~	~~12~~	
		1							COVER	ALUMINIUM		WITHOUT VARNISH	11	
			1						COVER	ALUMINIUM		GREY	10	BOLT OF THE COVER
				1					COVER	ALUMINIUM		GREY	9	NEUTRAL
							1		COVER	ALUMINIUM	ALUMINIUM OXID	BLACK	8	
						1		1	COVER	ALUMINIUM		GREY	7	
	1	1	1	1	1	1	1	1	FLANGE SEAL	NEOPRENE		BLACK	6	
	1	1	1	1	1	1	1	1	PROFIL SEAL	NEOPRENE		BLACK	5	
		1							SURFACE MOUNTED HOUSING BOTTOM ENTRY	ALUMINIUM		WITHOUT VARNISH	4	
				1					SURFACE MOUNTED HOUSING BOTTOM ENTRY	ALUMINIUM		GREY	3	NEUTRAL/EJECTOR COUNTERSANK
							1		SURFACE MOUNTED HOUSING BOTTOM ENTRY	ALUMINIUM	ALUMINIUM OXID	BLACK	2	
			1			1		1	SURFACE MOUNTED HOUSING BOTTOM ENTRY	ALUMINIUM		GREY	1	
	0-5	0-4	0-3	0-2	0-1	2-2	1-2		DESCRIPTION	MATERIAL	SURFACE	COLOR	ITEM	NOTES
	HB.48.AGD-LB	HB.48.AGD-LB	HB.48.AGD-LB	HB.48.AGD-LB	HB.48.AGD-LB	HB-K.48.AGD-LB	HB.48.AGD-LB							

NOTES

1. SUITABLE HOOD: SERIES HB.48
2. STANDARD: DIN EN 61984, DIN EN 60664-1
3. PACKAGING: QUANTITY 3 PIECES
4. ONLY FOR PN 0-2; SURFACE MOUNTED HOUSING WITHOUT HTS-LOGO
5. VARNISHING INSIDE HOUSING NOT REQUIRED

THIS DRAWING IS A CONTROLLED DOCUMENT.

DIMENSIONS: mm

TOLERANCES UNLESS OTHERWISE SPECIFIED: 0 PLC ±; 1 PLC ±; 2 PLC ±; 3 PLC ±; 4 PLC ±; ANGLES ±1°

MATERIAL - -

FINISH - -

DWN R.SCHNEIDER 29MAR2007
CHK SCHNURPFEIL 29MAR2007
APVD -
PRODUCT SPEC -
APPLICATION SPEC -
WEIGHT -

TE Connectivity

NAME SURFACE MOUNTED HOUSING BOTTOM ENTRY . HB.48.AGD-LB

SIZE A1 | CAGE CODE 00779 | DRAWING NO C-1102389 | RESTRICTED TO

CUSTOMER DRAWING | SCALE 5:1 | SHEET 1 OF 1 | REV C2

4805 (3/13)