MI0603L221R-11

PHYSICAL DIMENSIONS:

A	1.60	[.063]	± 0.15	[.006]
B	0.80	[.031]	± 0.15	[.006]
C	0.80	[.031]	± 0.15	[.006]
D	0.36	[.014]	± 0.15	[.006]

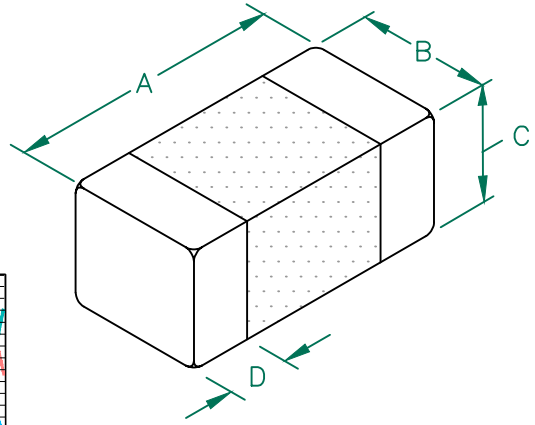

ELECTRICAL CHARACTERISTICS:

	Z @ 100MHz (Ω)	DCR (Ω)	Rated Current
Nominal	220	–	
Minimum	165	–	
Maximum	275	.050	2200 mA

NOTES: UNLESS OTHERWISE SPECIFIED

1. TAPED AND REELED per CURRENT EIA SPECIFICATIONS 7" REELS, 4000 PCS/REEL.
2. COMPONENTS SHOULD BE ADEQUATELY PREHEATED BEFORE SOLDERING.
3. TERMINATION FINISH IS 100% TIN.
4. OPERATING TEMP. RANGE: −40°C~+125°C. (INCLUDING SELF−HEATING)
5. COSMETIC SPECIFICATION REFER TO WI−QA−124.

Z vs FREQUENCY
IMPEDANCE UNDER DC BIAS

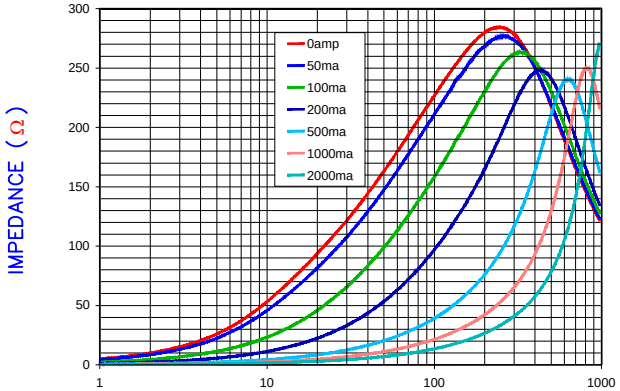

|Z| , R, AND X vs. FREQUENCY

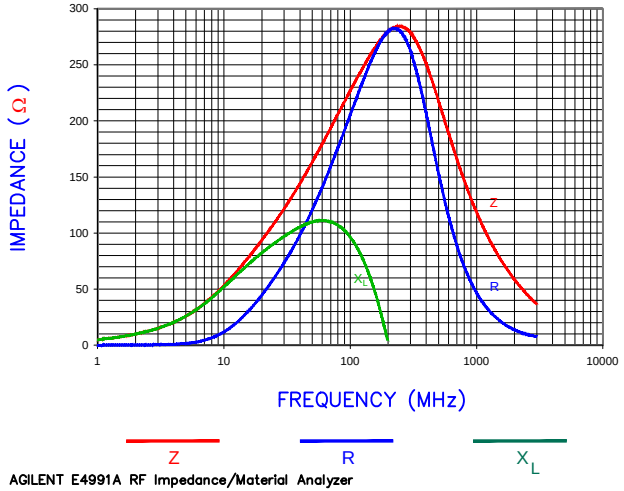

AGILENT E4991A RF Impedance/Material Analyzer
HP 16194A Test Fixture. TEST REF. 3375

LAND PATTERNS FOR REFLOW SOLDERING

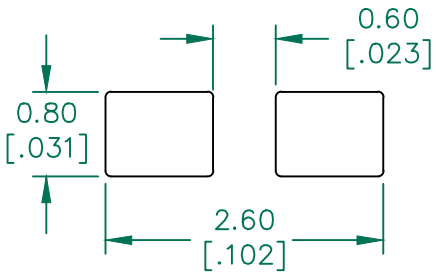

(For wave soldering, add 0.762 [.030] to this dimension)

RECOMMENDED SOLDERING CONDITIONS

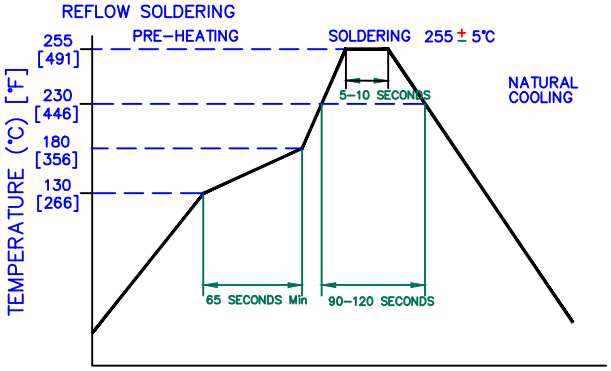

RoHS

REV	DESCRIPTION	DATE	INT
A	ORIGINAL DRAFT	10/14/13	QU

DIMENSIONS ARE IN mm [INCHES].

This print is the property of Laird Tech. and is loaned in confidence subject to return upon request and with the understanding that no copies shall be made without the written consent of Laird Tech. All rights to design or invention are reserved.

Laird

PROJECT/PART NUMBER:	REV	PART TYPE:	DRAWN BY:
MI0603L221R−11	A	CO−FIRE	QU

DATE:	SCALE:	SHEET:
10/14/13	–	1 of 1

CAD #	TOOL #
MI0603L221R−11−A	–