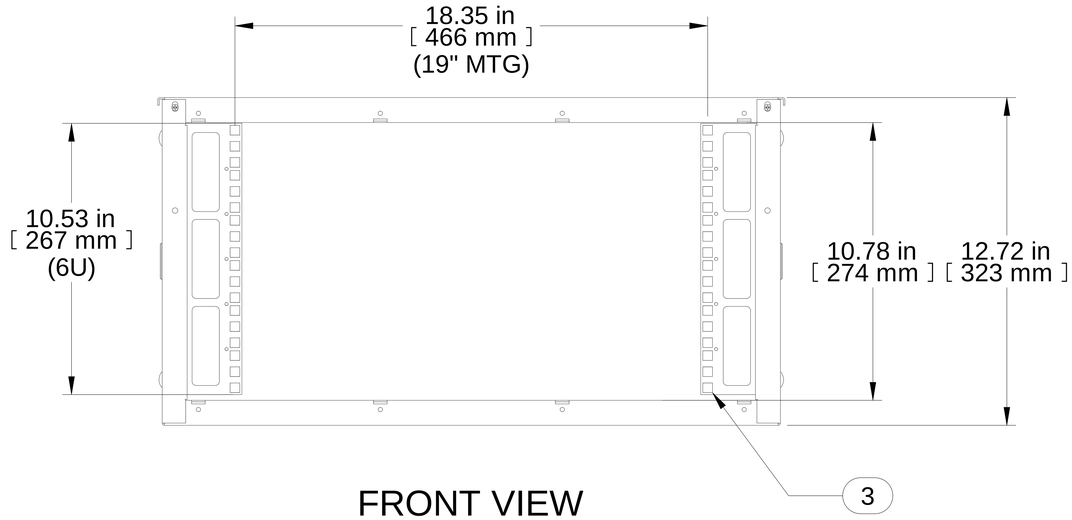


FRONT VIEW

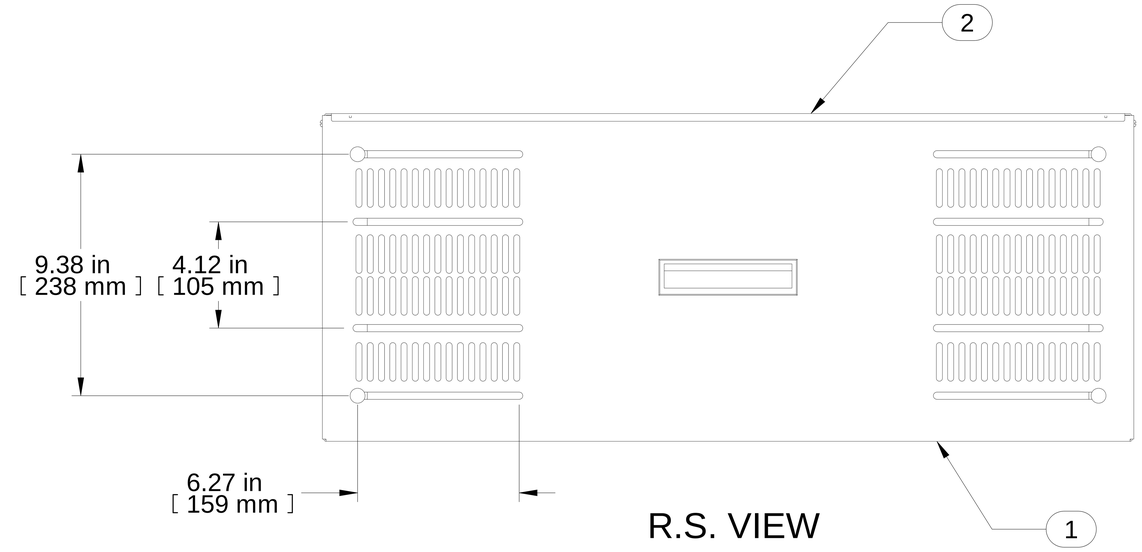


R.S. VIEW

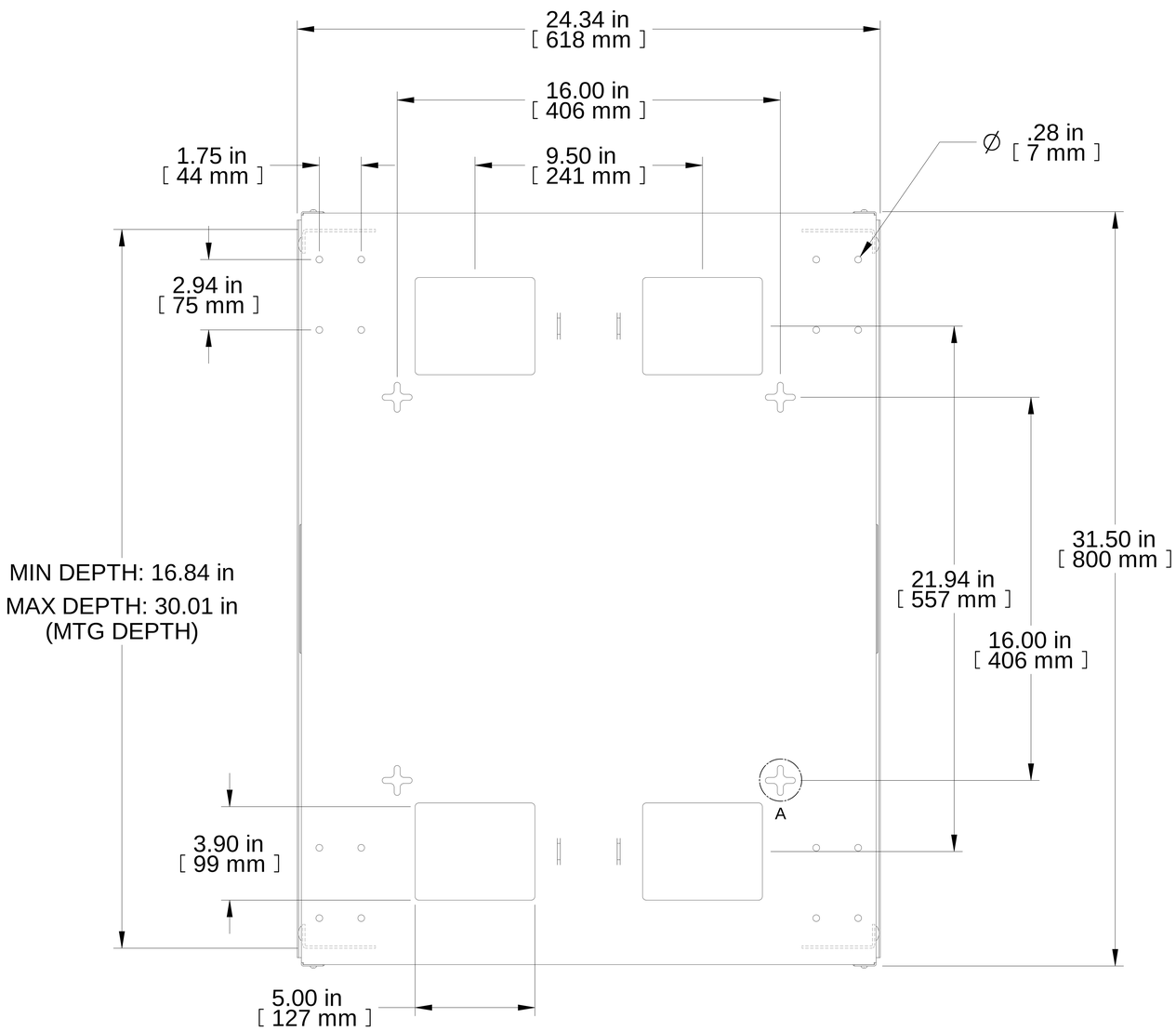


BOTTOM VIEW

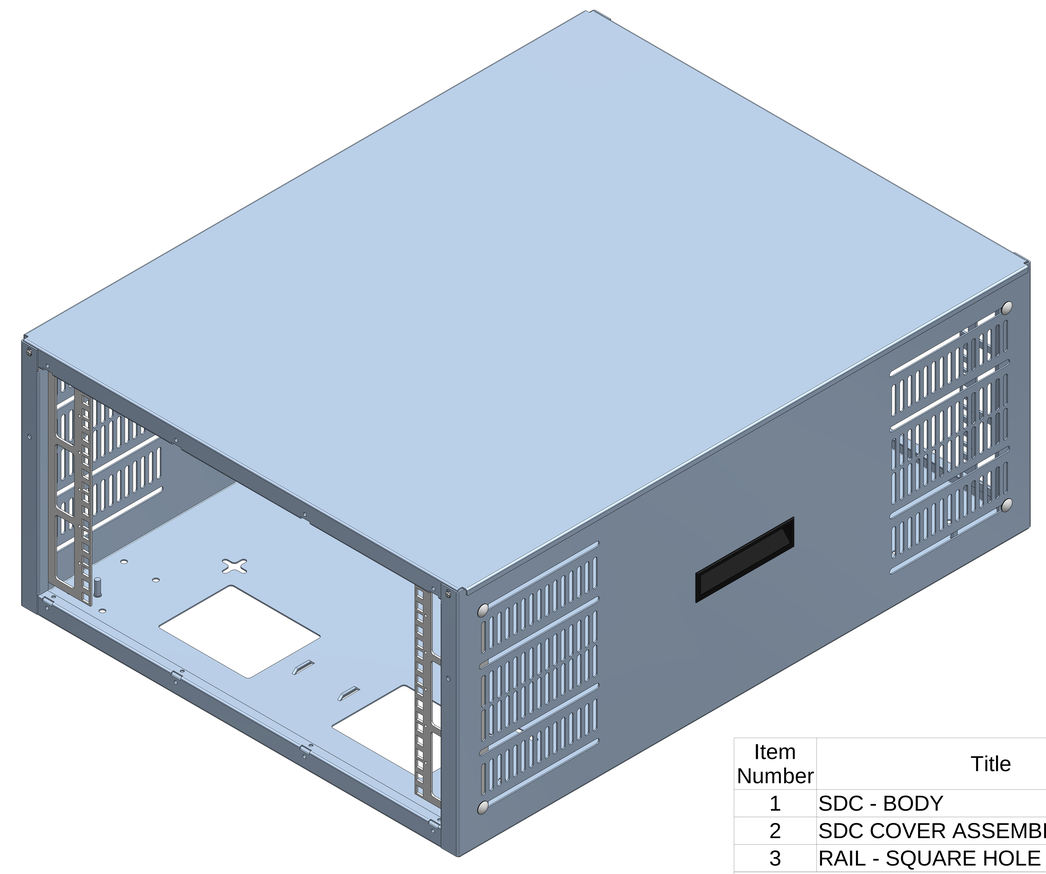

ISOMETRIC

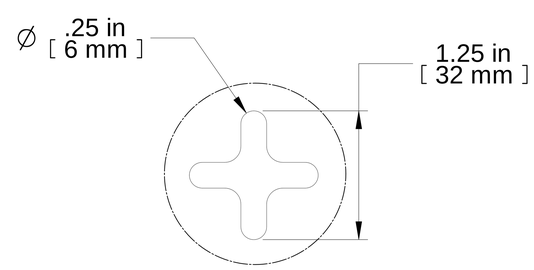


DETAIL A
SCALE 4:1

| Item Number | Title | Quantity |
|---|---|---|
| 1 | SDC - BODY | 1 |
| 2 | SDC COVER ASSEMBLY | 1 |
| 3 | RAIL - SQUARE HOLE | 4 |

**PART NUMBERS**

SDC246U31BK PAINTED BLACK TEXTURED

**NOTES**

Assembly Hardware Included
Mounting Hardware Not Included
See Hammond Website for More Accessories

**Français**

Pour tous les détails sur nos produits,
svp veuillez consulter notre site www.hammondmfg.com

Data subject to change without notice. Isometric drawing not to scale.
Les données sont sujettes à changement sans préavis.

HAMMOND MANUFACTURING®

www.hammondmfg.com

**PART NO.** **SDC246U31BK**