MODEL NO.	PACKAGING
134-1000-017	ONE PCS PER BAG

REV	ECO	DATE
001	ECO-17-0033	12/18/2017
002	ECO-18-0020	08/21/2018

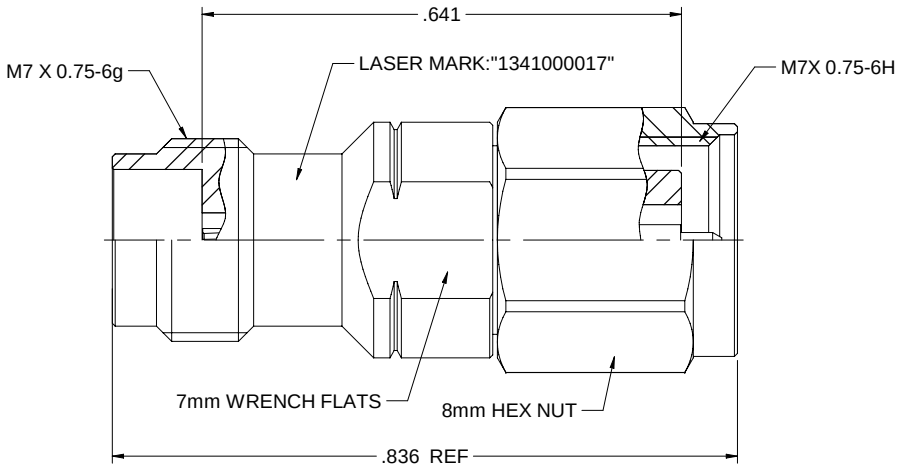

NOTES: UNLESS OTHERWISE SPECIFIED

1. MATERIAL & FINISH:
   1.1 BODY & SHELL: PASSIVATED STAINLESS STEEL
   1.2 CONTACT PIN : GOLD PLATED BERYLLIUM COPPER
   1.3 INSULATOR: ULTEM 1000 AMBER
   1.4 GASKET: SILICONE RED
   1.5 C RING: BERYLLIUM COPPER

2. ELECTRICAL:
   2.1 IMPEDANCE: 50 OHMS
   2.2 FREQUENCY RANGE: DC-50 GHz
   2.3 DIELECTRIC WITHSTANDING VOLTAGE: 500 VRMS MIN
   2.4 VOLTAGE STANDING WAVE RATIO: DC- 26.5GHZ: 1.06 MAX
   26.5- 40 GHZ: 1.10 MAX
   40 - 50 GHZ: 1.15 MAX
   2.5 CONTACT RESISTANCE: CENTER CONTACT: 4 MILLIOHMS MAX
   OUTER CONTACT: 2.5 MILLIOHMS MAX
   2.6 INSULATION RESISTANCE: 5000 MOHM MIN

3. MECHANICAL:
   3.1 ENGAGEMENT/ DISENGAGEMENT FORCE: 0.23 NM MAX
   3.2 COUPLING PROOF TORQUE: 1.65NM MIN (2.4MM)
   3.3 COUPLING NUT RETENTION FORCE: 267 N MIN (2.4MM)
   3.4 CONTACT RETENTION: 20 N MIN
   3.5 DURABILITY: 500 CYCLES MIN

4. ENVIRONMENT:
   4.1 THERMAL SHOCK: MIL-STD-202, METHOD 107, CONDITION B.
   4.2 OPERATING TEMPERATURE: -65 TO 165°C
   4.3 SHOCK: MIL-STD-202, METHOD 213, CONDITION I
   4.4 VIBRATION: MIL-STD-202, METHOD 204, CONDITION D
   4.5 MOISTURE RESISTANCE: MIL-STD-202, METHOD 106

cinch connectivity solutions	Model No. 134-1000-017		Johnson
	RoHS2 2011/65/EU	Cage Code	Title: ADAPTER ASSEMBLY,1.85mm JACK TO 2.4mm PLUG
This PROPRIETARY Drawing/ Specification is the property of Amphenol, it is confidential in nature and shall not be reproduced with the use of mechanical, electronic or by any other means without Amphenol's written permission upon demand.	UNLESS OTHERWISE SPECIFIED DIMENSIONS ARE IN MM	3RD ANGLE PROJECTION	Drawing No. 134-1000-017 / Rev. 002
INTERPRET DRAWING IN ACCORDANCE WITH ASME Y14.5-2009	.XXX ± .02 .XXXX ± .01 ANGLES ±5°	Drawn by: Betty.Yu	
		Date: 08/21/2018	Size C / DO NOT SCALE DRAWING / Workmanship Std NONE / Sheet 1 of 1