APPROVED: _____

DATE: _____ TITLE: _____

Rev	AWO #	Description	Date	Appr
-		RELEASED	6/16/05	
A		REDRAWN	01/23/13	
B		REVISED DIM.	03/27/13	
C		REVISED SHAPE	9/6/13	AY

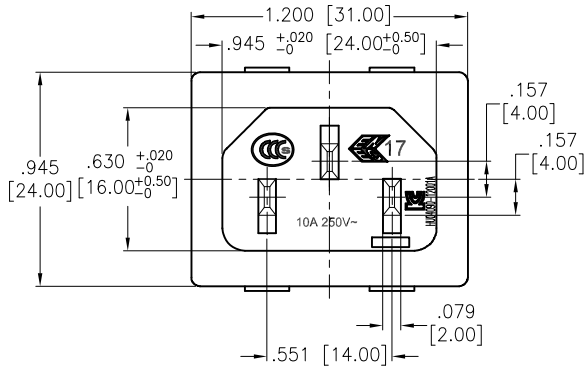

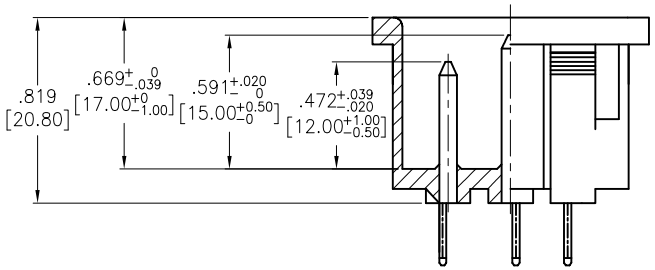

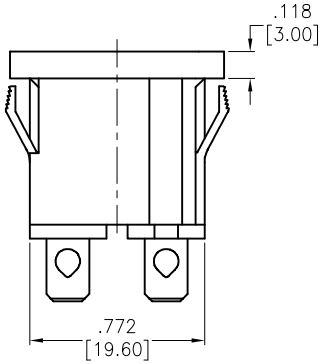

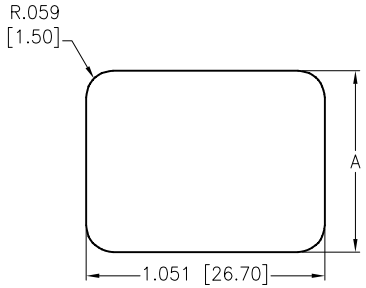

PANEL THICKNESS	DIMENSIONS A
.031-.047 [0.80-1.20]	.799 [20.30]
.051-.079 [1.30-2.00]	.807 [20.50]

RECOMMENDED PANEL CUT

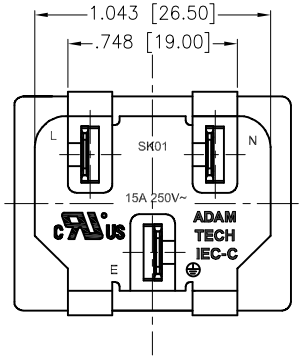

TERMINAL OPTIONS			
−1	−2	−3	−5
.187 Q.C.	.250 Q.C.	.157 Solder	.098 Solder

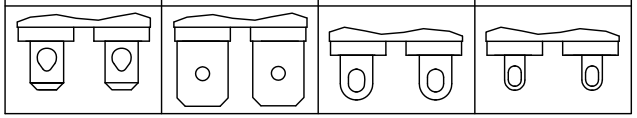

SPECIFICATIONS:
Material:
Insulator: Nylon 66, rated UL 94V−0
Insulator color: Black
Contacts: Copper Alloy
Plating:
Tin over Copper underplate overall
Electrical:
Current rating: C−ULus: 15A @ 250V
ENEC & CCC & KC: 10A @250V
Insulation resistance: 100 Mohms min @ 500 VDC
Dielectric withstanding voltage: 3,000 VAC for 1 minute
Environmental:
Operating Temp: −40°C to +70°C max.
Lead free, RoHS compliant

RoHS COMPLIANT

UNLESS OTHERWISE SPECIFIED
ALL DIMENSIONS ARE INCHES [MM]
TOLERANCES: EXCEPT AS NOTED

INCHES		HOLES	
.X	± .10	Ø.X	±.10
.XX	± .020	Ø.XX	±.015
.XXX	± .015	Ø.XXX	±.010

APPROVALS		DATE
DRAWN	SS	6/16/05
CHECKED		
APPROVED		

ADAM TECH
909 Rahway Avenue, Union, NJ 07083
Phone: 908-687-5000 Fax: 908-687-5710

TITLE
IEC MALE INLET, SNAP-IN PANEL MOUNT

SIZE	PART NO.	REV.
X	IEC-C-X	C

REF: S00087C | SCALE: NTS | SHEET 1 OF 1