| ITEM NO. | PART NUMBER | DESCRIPTION | QTY. | COMPONENT NOTES |
|---|---|---|---|---|
| 1 | 50-00988 | Connector, 5 pin M12 A-code plug, 12xL22mm, gold plated, molding style, solder cup, IP67, shielded | 1 | |
| 2 | 50-00981 | Connector, 5 pin M12 A-code socket, 12xL22mm, gold plated, molding style, solder cup, IP67, shielded | 1 | |
| 3 | 30-01586 | Wire, 5C TS, 22 AWG, UL20387, 300V, 105C, 60C oil, UV, 6.5 mm, shielded, VW-1, PVC, 80A, black | 1 | |
| 4 | 24-00361 | Overmold, M12 plug and jack, 90° | 1 | PVC, black |
| 5 | 24-00349 | Overmold, M12 plug and jack, 180° | 1 | PVC, black |

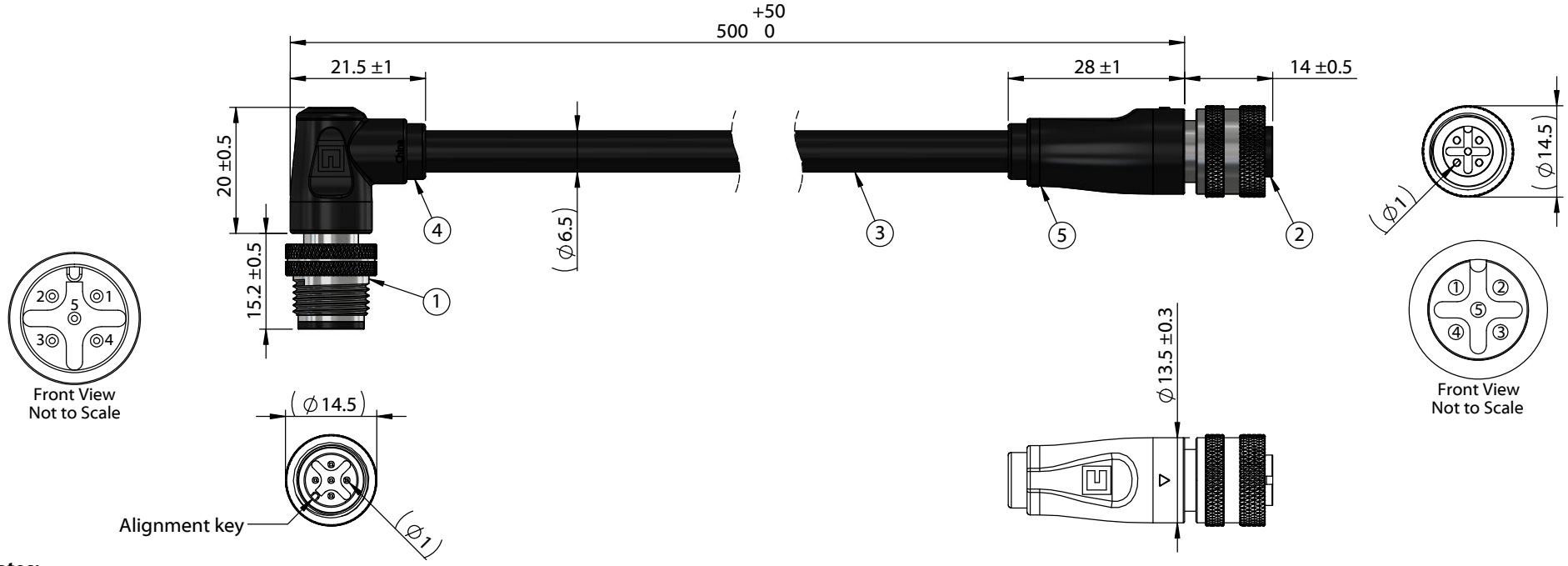


**Notes:**
Cable rated for 60 V, 4 A
Temperature: -40 ~ 105 °C
Oil resistant up to 60 °C
Water resistant up to 75 °C
UV resistant

IP67 waterproof rating when mated with corresponding (IP67) connector

Functionally equivalent components may be substituted

| Wiring Diagram | | |
|---|---|---|
| 50-00988 | wire color | 50-00981 |
| 1 | red | 1 |
| 2 | yellow | 2 |
| 3 | black | 3 |
| 4 | white | 4 |
| 5 | blue | 5 |
| Shell | shield/drain | Shell |

| Revision: | Date: | Description: |
|---|---|---|
| A | 1/4/2022 | Initial release |
| | | |
| | | |
| | | |
| | | |

Prepared: PB Digitally signed by PB Date: 2022.01.14 16:32:45 -08'00'

Verified: MP Digitally signed by MP Date: 2022.07.12 13:39:06 -07'00'

Dimensions are in millimeters.
Tolerances:
X: ± 0.5 mm
X.X: ± 0.3 mm
X.XX: ± 0.05 mm

Notes:

RoHS compliant

Function test: no open, no short circuit, no intermittent

Description:

Cable, 500 mm, 1.0 mm 5C 90° 50-00988 M12 plug to 1.0 mm 50-00981 M12 socket, 22 AWG, 30-01586 wire


TENSILITY
tel 1.541.323.3228 800 877.670.7118
fax 1.541.323.4202 web tensility.com


Size: A
Part number: 10-05085
Scale: 1:1
Sheet 1 of 1

To see a custom version of this cable assembly, call Tensility at 541-323-3228 or email engineering@tensility.com

5 4 3 2 1