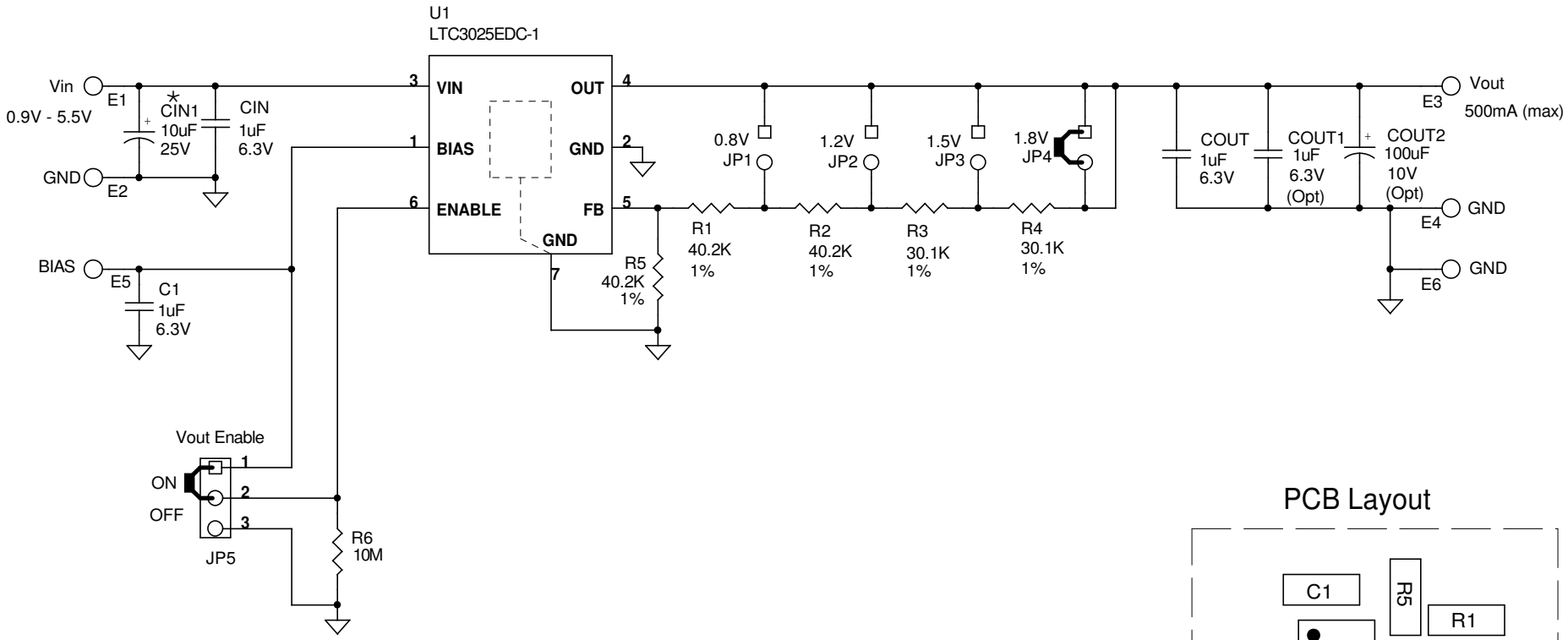

PCB Layout

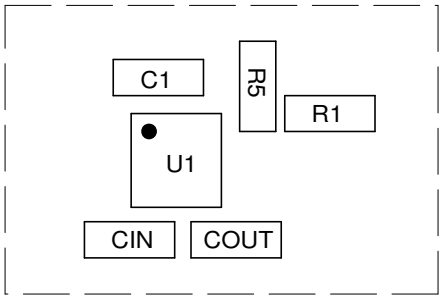

* CIN1 is an optional capacitor. It is inserted on the DC1283A to dampen the (possible) ringing voltage due to the use of long input leads. On a normal, typical PCB, with short traces, CIN1 is not needed.

CUSTOMER NOTICE

LINEAR TECHNOLOGY HAS MADE A BEST EFFORT TO DESIGN A CIRCUIT THAT MEETS CUSTOMER-SUPPLIED SPECIFICATIONS; HOWEVER, IT REMAINS THE CUSTOMER'S RESPONSIBILITY TO VERIFY PROPER AND RELIABLE OPERATION IN THE ACTUAL APPLICATION. COMPONENT SUBSTITUTION AND PRINTED CIRCUIT BOARD LAYOUT MAY SIGNIFICANTLY AFFECT CIRCUIT PERFORMANCE OR RELIABILITY. CONTACT LINEAR TECHNOLOGY APPLICATIONS ENGINEERING FOR ASSISTANCE.

THIS CIRCUIT IS PROPRIETARY TO LINEAR TECHNOLOGY AND SUPPLIED FOR USE WITH LINEAR TECHNOLOGY PARTS.

CONTRACT NO.

APPROVALS		DATE
DRAWN	AntoninaK	5/17/07
CHECKED		
APPROVED		
ENGINEER	Tom Gross	5/17/07
DESIGNER		

Tuesday, July 31, 2007

LINEAR TECHNOLOGY
1630 McCarthy Blvd.
Milpitas, CA 95035
Phone: (408)432-1900
Fax: (408)434-0507

TITLE LTC3025EDC-1
VLDO Linear Regulator

SIZE	CAGE CODE	DWG NO	REV
		DC1283A	A

SCALE: FILENAME: SHEET 1 OF 1