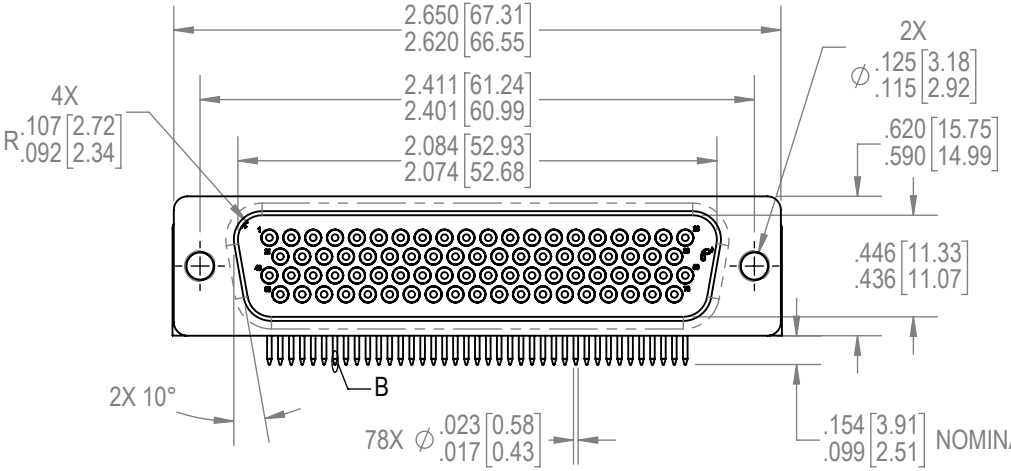

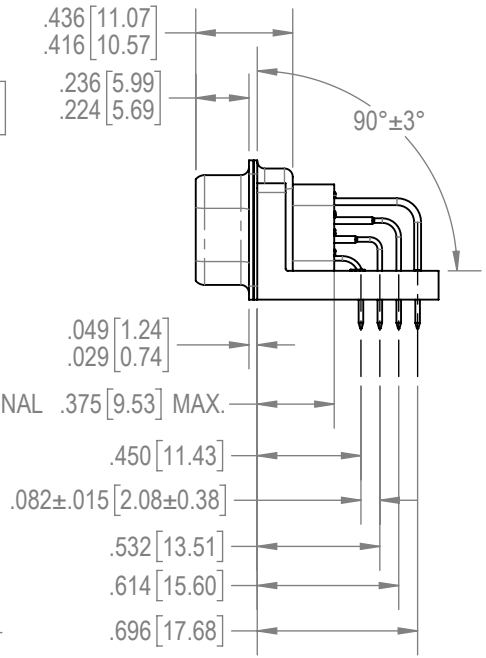

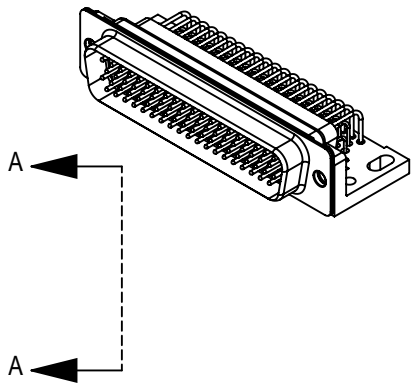

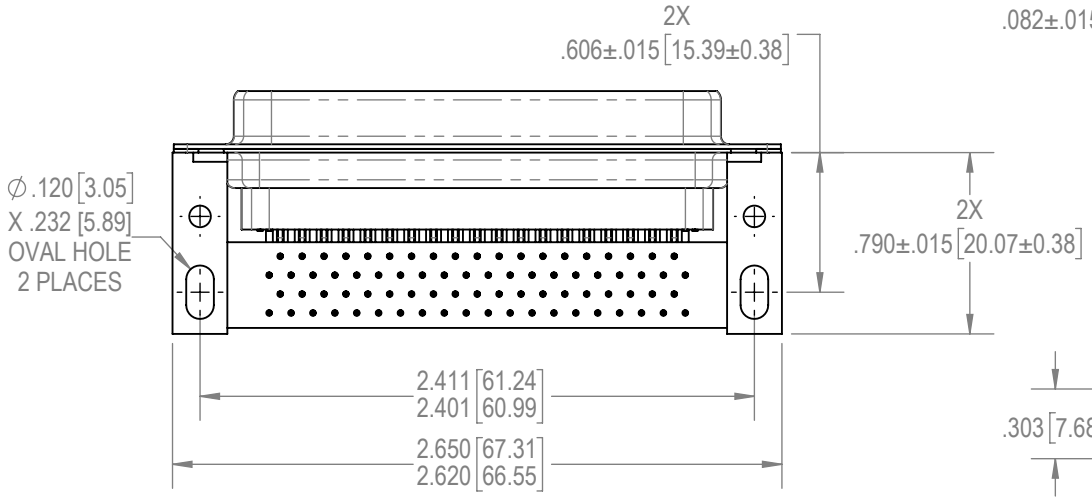

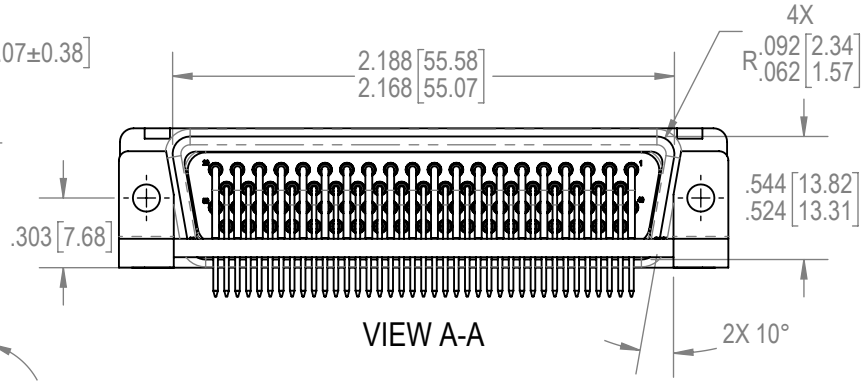

VIEW A-A

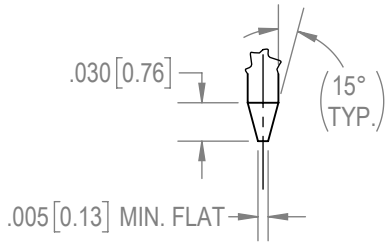

DETAIL B

NOTES:

1. THE REQUIREMENTS FOR THE PRODUCT HERE IN SHALL CONSIST OF MIL-DTL-24308.
2. IN THE EVENT OF A CONFLICT BETWEEN THIS DOCUMENT AND MIL-DTL-24308, MIL-DTL-24308 SHALL TAKE PRECEDENCE.

BY: AP	CHK: ND	3RD ANGLE	POSITRONIC BELIEVES THE DATA ON THE DRAWING TO BE RELIABLE. THE USER EMPLOYS SUCH INFORMATION AT HIS OWN DISCRETION AND RISK. POSITRONIC ASSUMES NO RESPONSIBILITY FOR RESULTS OBTAINED OR DAMAGES INCURRED FROM USE OF SUCH INFORMATION IN WHOLE OR IN PART.
APR: AB	RELEASED DATE: 2022-11-30	SCALE: NTS	
TOLERANCES: ±.010 INCHES [0.25 mm] DIMENSIONS ARE IN INCHES. (MILLIMETER EQUIVELANTS GIVEN FOR REFERENCE ONLY)			Positronic® CONNECTPOSITRONIC.COM
PART NUMBER: M24308/24-77F			SERIES: M24308
TITLE: M24308/24-77F			
CREATED ON: 2022-11-30	SHEET: SHEET 1 OF 1		REV: A