SD05
Integrated Signal Indicator

※eYc SD05 fit for other kinds of transmitter

| Features |

- SD05: 330° turnable, the direction of panel is changeable, good monitoring angle without blind corner
- Display : On-site display / 4 ... 20 mA / 0 ... 10 V
- Programmable, display value can be set according to sensor's spec
- Integrated display connected with 2-wire or 3-wire transmitter suitable for the on-site application
- The power is from 2-wire signal loop, 3-wire no extra power supply is required, easy to install
- Programmable by pressing 2 buttons, easy to operate
- High performance, good stability and functionality
- Input signal: 4 ... 20 mA (2-wire) / 0 ... 10 V (3-wire)

| Applications |

With extensive applications as process monitoring in semiconductor industry / Steel industry / Chemical industry / Environmental engineering / Food processing / Pharmaceutical industry / Water plants / Power plants / Research and development

| Specification |

Input

Input signal	4 ... 20 mA(2-wire) / 0 ... 10 V(3-wire)
	Eg : Pressure / Differential pressure / Temp. / Flow / PH value / Load cell, etc
Parameter setting	Programmable by pressing the button

Output

Display method	4-Digit LED (Height of word : 9.2 mm)
Display range	-1999 ... +9999
Scale	Decimal point, programmable
Accuracy	0.2%F.S.
Overload current	40 mA (2-wire)

Electrical

Power supply	DC 4 ... 20 mA ‧ 2-wire
	DC 12 ... 33 V ‧ 3-wire
Electrical connector	DIN 43650 : 330° / M12 : 210°

Environment

Operating Temp.	20°C ... 60°C
Operating Humid.	0 ... 95%RH (Non-condensing)

Protection

IP Rating	IP 65
Electric protection	■ Polarity protection

Certification

Certification	CE

Material

Housing (Body)	ABS(UL94V-0) + PC(UL94V-2)
Weight	H : 125 g / M : 127 g

| Diagram |

■ 2-Wire (4 ... 20 mA)

DIN46350 Connection

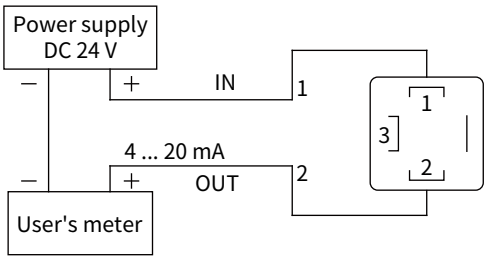

M12 Connection

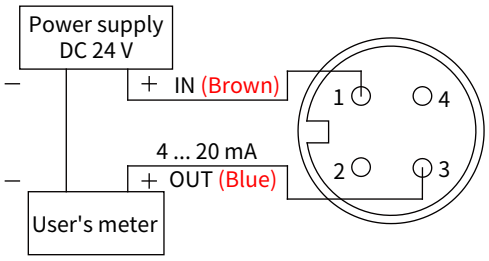

■ 3-Wire (0 ... 10 V)

DIN46350 Connection

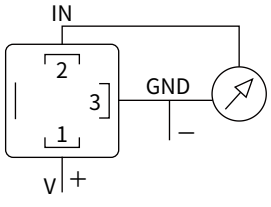

1.(V+) 2.(IN) 3.(GND)

M12 Connection

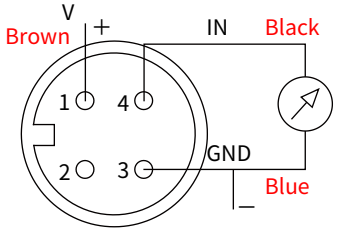

1.(V+) 3.(GND) 4.(IN)

| Dimension | Unit：mm

DIN43650 Connection

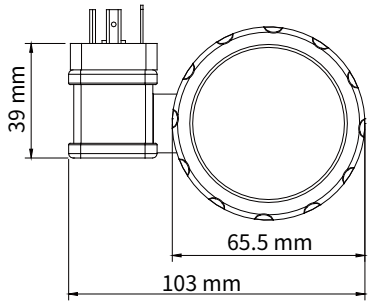

M12 Connection

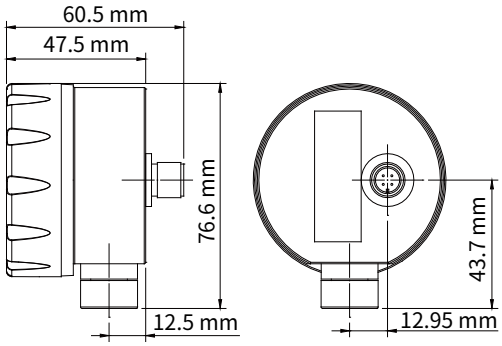

| Ordering Guide |

	Installation		Display	Input signal	Power supply		Connector
SD —	05	—	1	1	0	—	H

- 05：Integrated-type
- 1：LED
- 1：4 ... 20 mA (2-wire)
  3：0 ... 10 V (3-wire)
- 0：2-wire loop power
  3：3-wire DC 12 ... 33 V
- H：DIN 43650
  M：M12