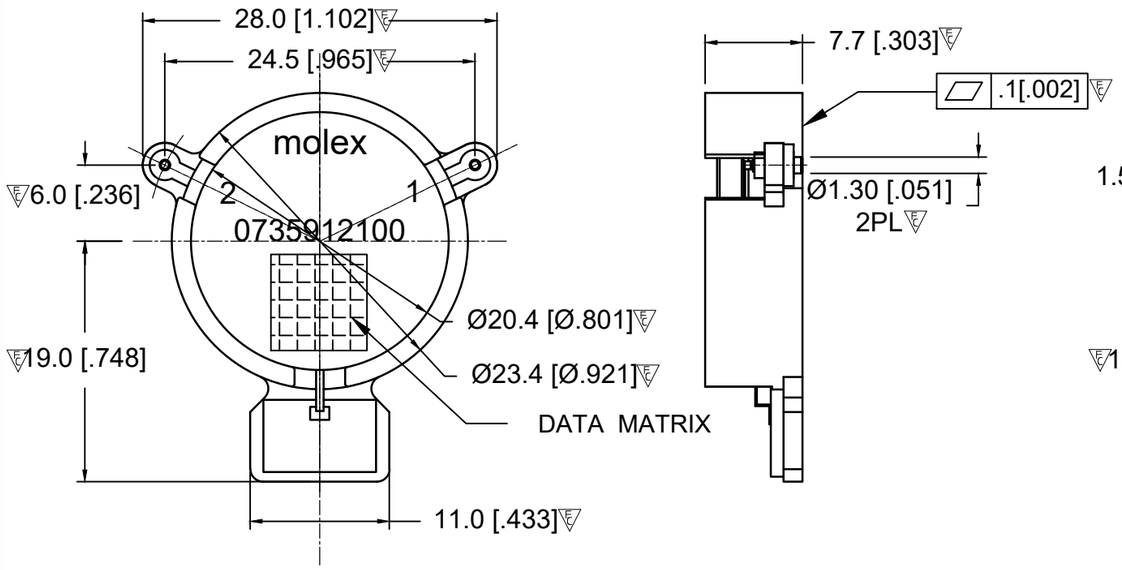

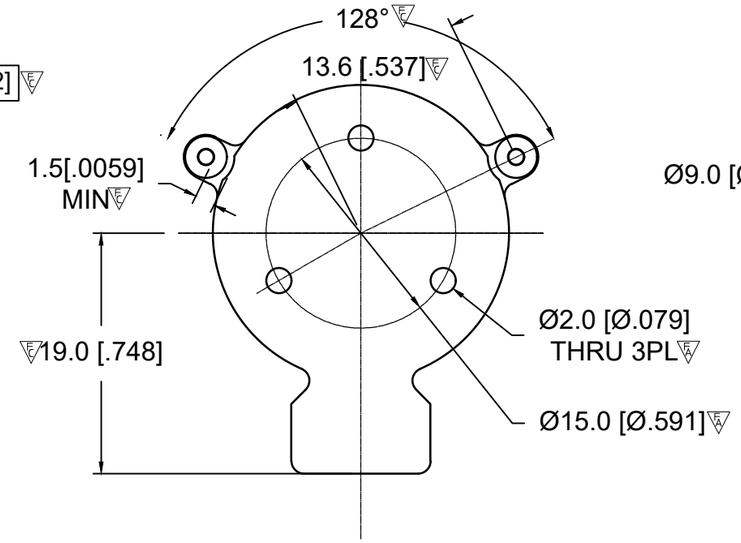

RECOMMENDED LAND PATTERN :

Zone A must be attached to heat sink. Thermal conductivity of intermediate layers between Zone A and heat sink must be better than 0.1 W / [°C x mm].

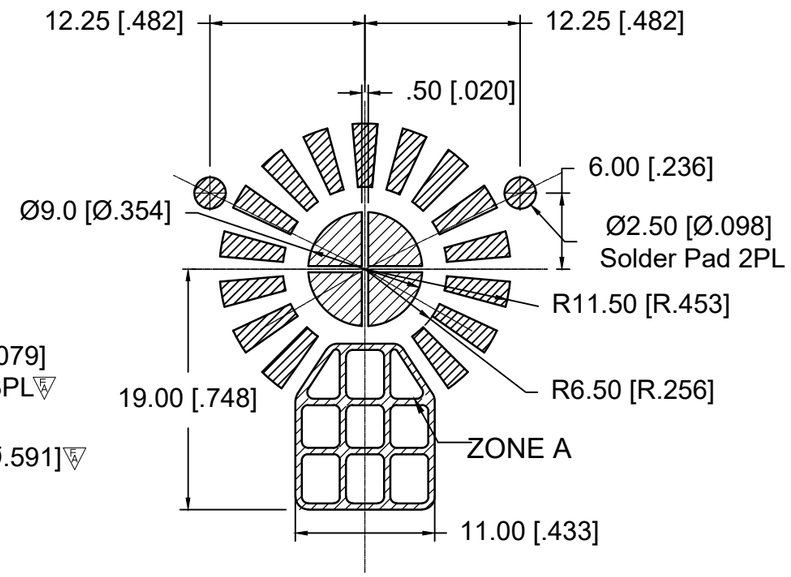

PCB Material : RO 4350B , 20 mil THK

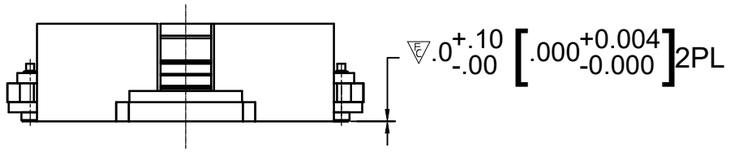

ELECTRICAL SPECIFICATION :

Frequency Range	: 859~894 MHz
Input Power	: 100 W
Input Power , Peak	: 1300 W
Reflected Power	: 80 W
Isolation (Within frequency range, Port 2 to 1)	: 22 dB Min
Return Loss (Measured at Port 1 and Port 2)	: 23 dB Min (0°C~125°C)
	: 20 dB Min (-40°C~0°C)
Insertion Loss (Within frequency range, Port 1 to 2)	: 0.25 dB Max
Inter modulation distortion, IM3(2 x 50 W)	: -69 dBc Max
IM5(2 x 50 W)	: -79 dBc Max
Harmonics: 2 x f(100W CW)	: 0 dBm Max
3-4 x f (100W CW)	:-10 dBm Max
5 x f (100W CW)	:-35 dBm Max
6-7 x f (100W CW)	:-25 dBm Max
Operating Temperature Range	: -40°C to +125°C
Storage Temperature Range	: -40°C to +125°C
Direction	: CCW

BODY: CARBON STEEL, SILVER PLATED
RIGID PINS: COPPER, SILVER PLATED
NOTES:
1.STANDARD INPUT/OUTPUT IMPEDANCE 50 Ohm
2.LEAD FREE, NO Nd MATERIAL, BeO FREE
3.THE DIMENSION OF DATE MATRIX IS 7.6X7.6MM INFORMATION INCLUDING WORK ORDER NUMBER-SERIAL NUMBER-MATERIAL NUMBER
4.THIS PART COMPLIES WITH ALL RoHS REQUIREMENTS

ENG PN#: 811-085-089-WB040

THIS DRAWING CONTAINS INFORMATION THAT IS PROPRIETARY TO MOLEX ELECTRONIC TECHNOLOGIES, LLC AND SHOULD NOT BE USED WITHOUT WRITTEN PERMISSION

FUNCTIONAL SYMBOLS: A=0, C=0, P=0
DIVISIONAL SYMBOLS

DIMENSION UNITS: MM
SCALE: 1:1

GENERAL TOLERANCES (UNLESS SPECIFIED)

	mm	INCH
4 PLACES	±0.005	±----
3 PLACES	±0.025	±----
2 PLACES	±0.13	±----
1 PLACE	±0.25	±----
0 PLACES	±0.4	±----
ANGULAR TOL ± 1.5 °		

DRAFT WHERE APPLICABLE MUST REMAIN WITHIN DIMENSIONS

CURRENT REV DESC: RELEASE TO PROD
EC NO: 696580
DRWN: SREN05 2022/02/21
CHK'D: JLI252 2022/02/23
APPR: HWANG186 2022/03/01

INITIAL REVISION:
DRWN: SREN05 2021/12/09
APPR: HWANG186 2022/03/01

THIRD ANGLE PROJECTION

molex

SMSJ ISOLATOR/859~894 MHZ/CCW

RESTRICTED PRODUCT CUSTOMER DRAWING

DOCUMENT NUMBER	DOC TYPE	DOC PART	REVISION
735912100	PSD	000	A

DRAWING	SERIES	MATERIAL NUMBER	CUSTOMER	SHEET NUMBER
A3-SIZE	73591	0735912100	CUSTOM PART	1 OF 1

DOCUMENT STATUS	P1	RELEASE DATE	2022/03/01 06:07:43

FORMAT: ACAD-tb-prod-A3
REVISION: A1
DATE: 2019/06/12