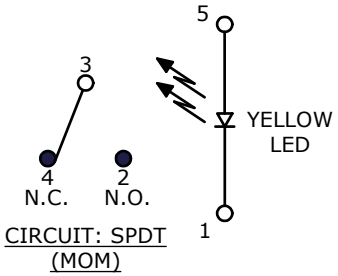

CIRCUIT: SPDT
(MOM)

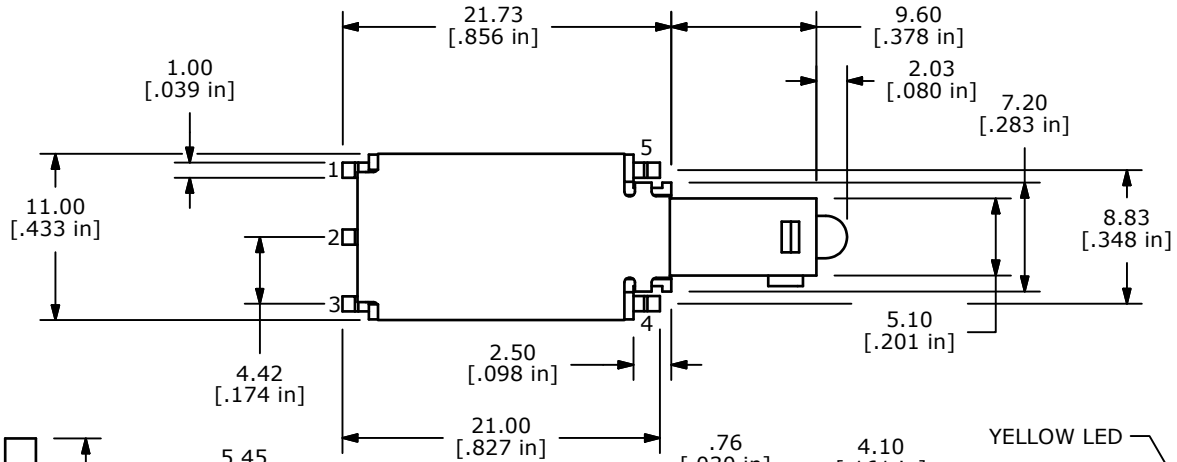

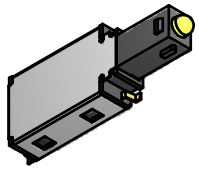

ISOMETRIC

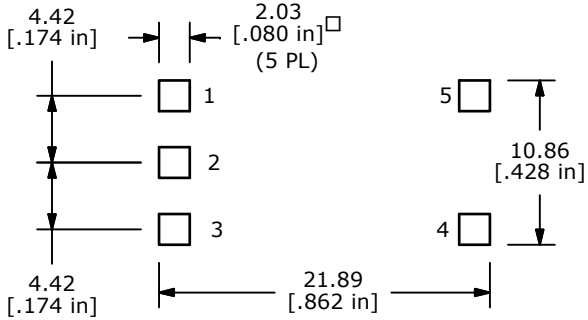

PCB LAYOUT

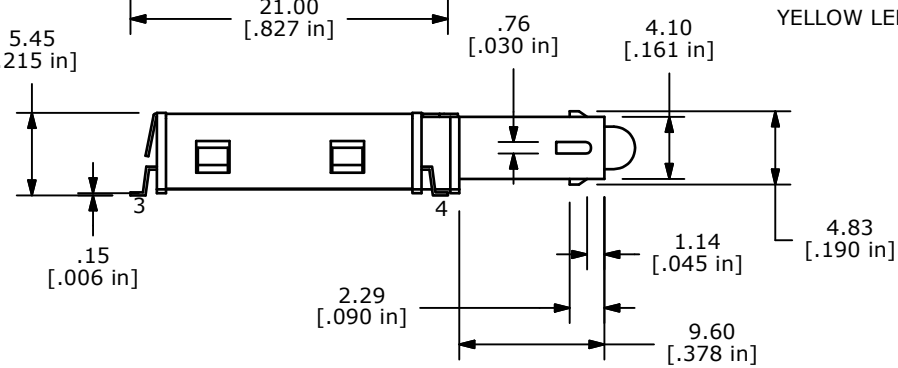

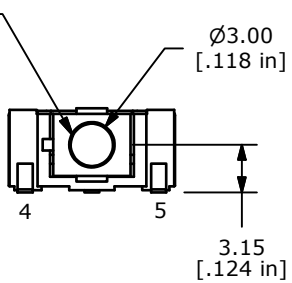

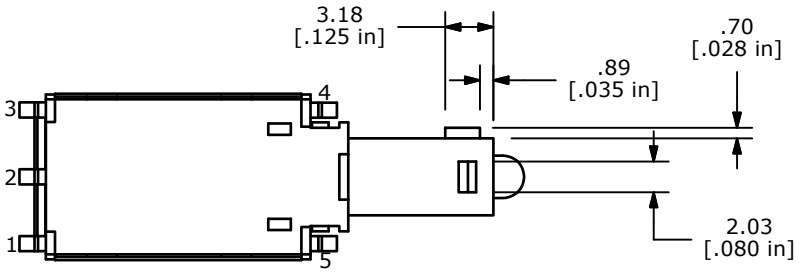

NOTES:
1. ALL DIMENSIONS IN MM [INCH]
2. GENERAL TOLERANCE: X.X=±0.4
   X.XX=±0.25
3. TERMINAL NUMBERS FOR REF ONLY
4. RATING: CURRENT: .01mA-250mA
   VOLTAGE: 20mV-50 VDC
5. OPERATING LIFE: 30,000 MAKE-AND-BREAK CYCLES
6. INSULATION RESISTANCE: 1000VDC, 1,000 Mega-OHMS MIN.
7. ▲ OPERATING FORCE: 250gf ± 100 GRAMS
8. OPERATING TEMP.: -30°C to 85°C (B)
9. ▲ TRAVEL: MOMENTARY
   FULL TRAVEL 5.1 ± 0.5mm
10. CONTACT RESISTANCE: 50 Milli-OHMS MAX.
11. ▲ DENOTES CRITICAL PARAMETER.
12. 2002/95/EC (ROHS) COMPLIANT
13. ▲ LED COLOR: YELLOW

▲ LED SPECS	UNITS	YELLOW
FORWARD CURRENT	mA	20
FORWARD VOLTAGE @20mA	V	2.1 TYP-2.6 MAX
LUMINOUS INTENSITY @ 20mA	MCD	30

REV	PCR NO	DESCRIPTION	DATE	BY
B	19585	CHANGE DIMS & TEMP.	1/14/11	BGL
A	19040	Release For Production	5/5/10	BLR

THE INFORMATION CONTAINED IN THIS DOCUMENT IS PROPRIETARY TO E-SWITCH AND IS NOT TO BE COPIED OR TRANSFERRED

E•SWITCH™

TITLE LP37OACGY

SCALE	DATE	DR	DWG	REV
2=1	5/5/2010	BLR	T010002	B