DRAWING IS UNPUBLISHED. RELEASED FOR PUBLICATION .19
COPYRIGHT 19 BY AMP INCORPORATED. ALL RIGHTS RESERVED.

| LOC | DIST | REVISIONS | | | |
|---|---|---|---|---|---|
| CM | 53 | LTR | DESCRIPTION | DATE | DWN |
| | | 0 | RLSD PER PR CM 97-82 | 7-08-97 | BL |

1. DIMENSIONS IN BRACKETS ARE IN INCHES.

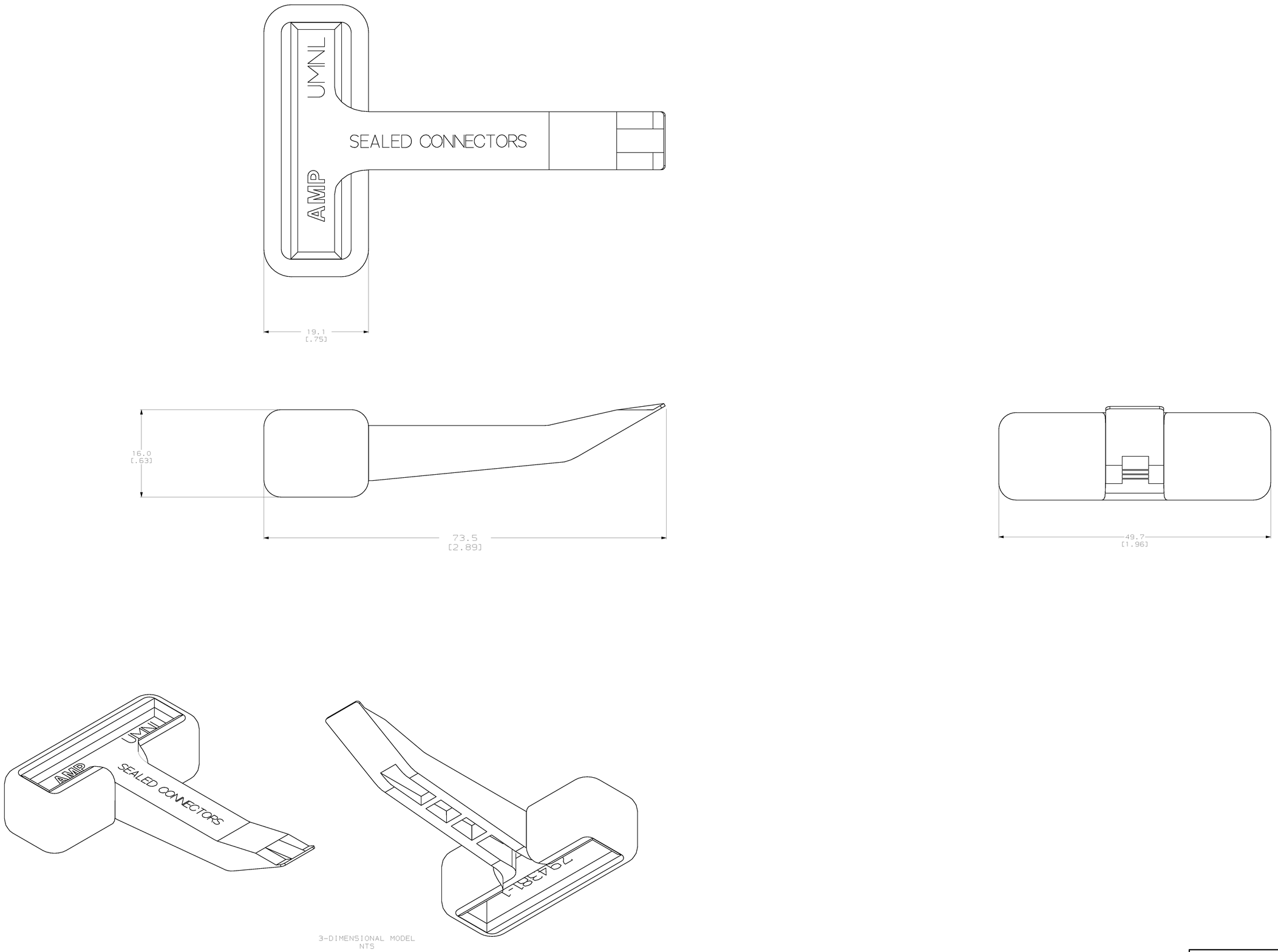


3-DIMENSIONAL MODEL
NTS

794381-1
PART NUMBER

THIS DRAWING IS A CONTROLLED DOCUMENT.

DIMENSIONS: mm [INCHES]

TOLERANCES UNLESS OTHERWISE SPECIFIED:
0 PLC ±-
1 PLC ±-
2 PLC ±-
3 PLC ±0.13 [.005]
4 PLC ±-
ANGLES ±0.30°

MATERIAL: NYLON,UL94V-0, BLACK

FINISH: -

DWN: B. LEWIS 7-08-97
CHK: R. SWING 7-08-97
APVD: D. SELE 7-08-97
PRODUCT SPEC: -
APPLICATION SPEC: -
WEIGHT: -
CUSTOMER DRAWING

AMP Incorporated
Harrisburg, PA 17105-3

NAME: SEALED CONNECTOR LATCH TOOL

SIZE: A0 | CAGE CODE: 00779 | DRAWING NO: C-794381 | RESTRICTED: -

SCALE: 4:1 | SHEET: 1 OF 1

METRIC

6 REV 27JUN96
3:18:37 amp24119 /home/amp24119/u.pr97-68