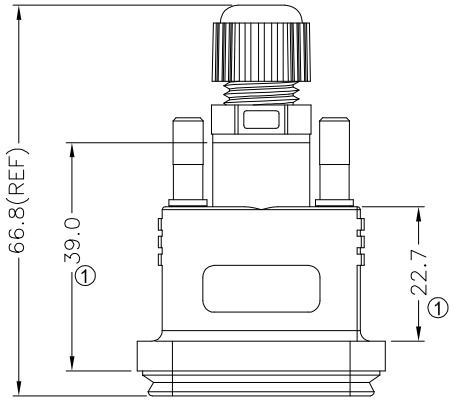

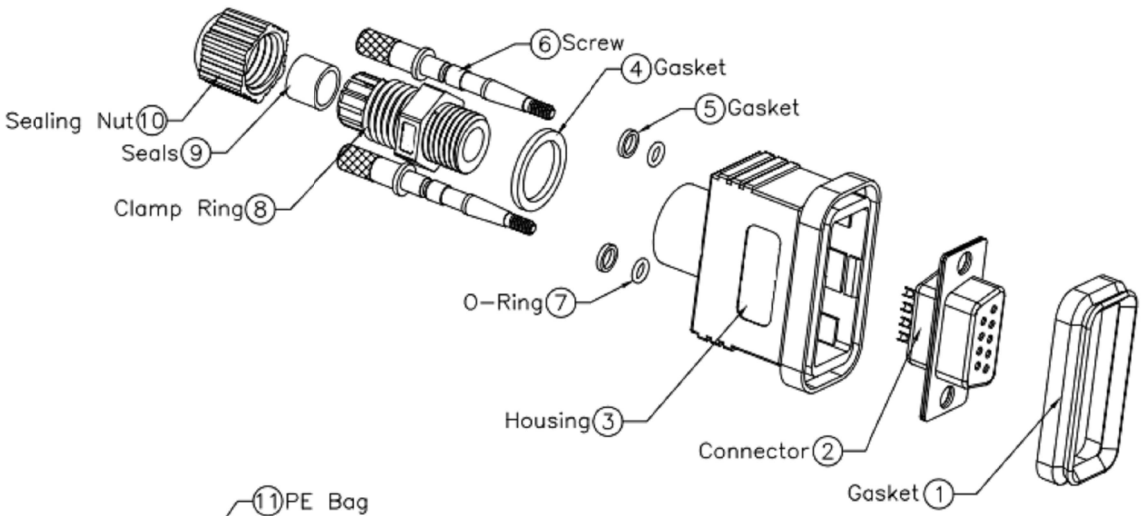

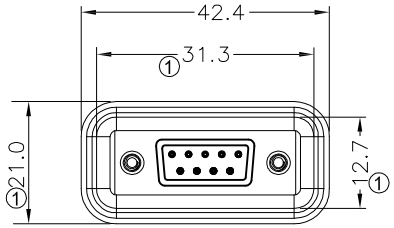

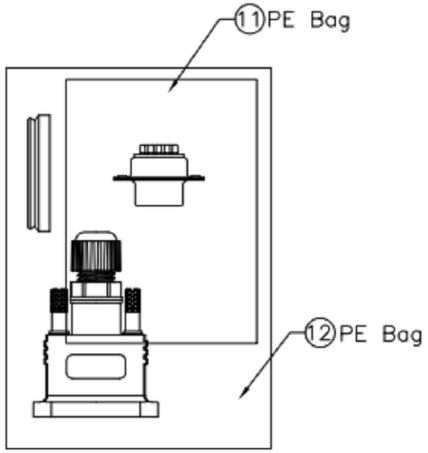

NOTES:
1. Waterproof rate: IP67
2. Gasket: EPDM Black
3. Housing: ABS Black
4. Screw: Brass
5. O-ring: Silicone Clear
6. Body: Nylon Black
7. Sealing Nut: Nylon Black
8. Connector: D-Sub 09Pin Female, in full gold plated ①
9. Seals for Cable OD:⌀3.5mm-⌀7.0mm
10. One Set Unassembled in One Zipper Bag

RoHS compliant
Unit: mm

Scale	Free					Date	Name	Customer-No.
TOLERANCE					Drawn	22.04.2014	Joanna	
					Approved	03.04.2018	Amy	ASSMANN WSW-No. A-DF09-HOOD-WP
UNIT	±0.5							
DIM	TOL	①	Cancel "A" logo&correct dimensions	03.04.2018	Amy			Drawing-No. ASS 6255 CO rev01
		⓪	Drawn	22.04.2014	Joanna			
Angle	TOL	Id.	Modification	Date	Name			Replace / Sheet

ASSMANN WSW components