REVISION HISTORY				
ECO	REV	DESCRIPTION	APPROVED	DATE
-	4	PRODUCTION	KEITH S.	May 24, 2012

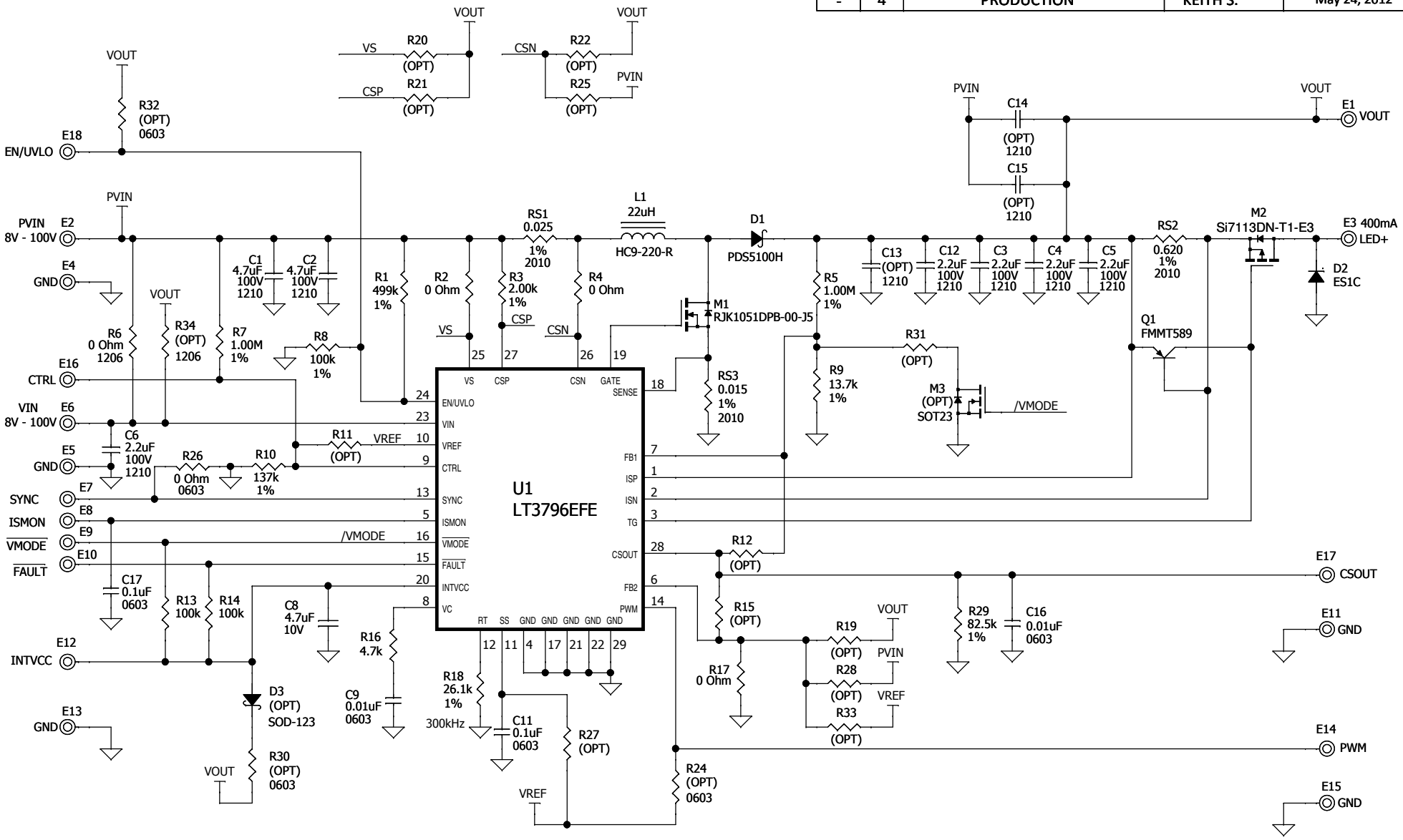

NOTE: UNLESS OTHERWISE SPECIFIED.

1. ALL RESISTORS 0402.
2. ALL CAPACITORS 0603.

CUSTOMER NOTICE

LINEAR TECHNOLOGY HAS MADE A BEST EFFORT TO DESIGN A CIRCUIT THAT MEETS CUSTOMER-SUPPLIED SPECIFICATIONS; HOWEVER, IT REMAINS THE CUSTOMER'S RESPONSIBILITY TO VERIFY PROPER AND RELIABLE OPERATION IN THE ACTUAL APPLICATION. COMPONENT SUBSTITUTION AND PRINTED CIRCUIT BOARD LAYOUT MAY SIGNIFICANTLY AFFECT CIRCUIT PERFORMANCE OR RELIABILITY. CONTACT LINEAR TECHNOLOGY APPLICATIONS ENGINEERING FOR ASSISTANCE.

THIS CIRCUIT IS PROPRIETARY TO LINEAR TECHNOLOGY AND SUPPLIED FOR USE WITH LINEAR TECHNOLOGY PARTS.

APPROVALS	
PCB DES.	RB
APP ENG.	KEITH S.

SCALE = NONE

LINEAR TECHNOLOGY
1630 McCarthy Blvd.
Milpitas, CA 95035 www.linear.com
Phone: (408)432-1900
Fax: (408)434-0507

LTC CONFIDENTIAL - FOR CUSTOMER USE ONLY

TITLE: SCHEMATIC
100V LED CONTROLLER WITH CURRENT MONITOR

SIZE	IC NO.	REV.
N/A	LT3796EFE DEMO CIRCUIT 1706A	4

MODIFY DATE: May 24, 2012

SHEET 1 OF 1