Mounting Option
08-#4-40 Unified Threaded Inserts

Contact Detail
523-P.C. Tail .025 Sq.(0.64 Sq.) - Tail LG=.390(9.91)
.156 [3.96] Contact Spacing x .200 [5.08] Row Spacing

THIS IS A C.A.D. GENERATED DRAWING
DO NOT MAKE MANUAL REVISIONS TO MASTER.

ISSUE NUMBER	
ORIGINAL	1

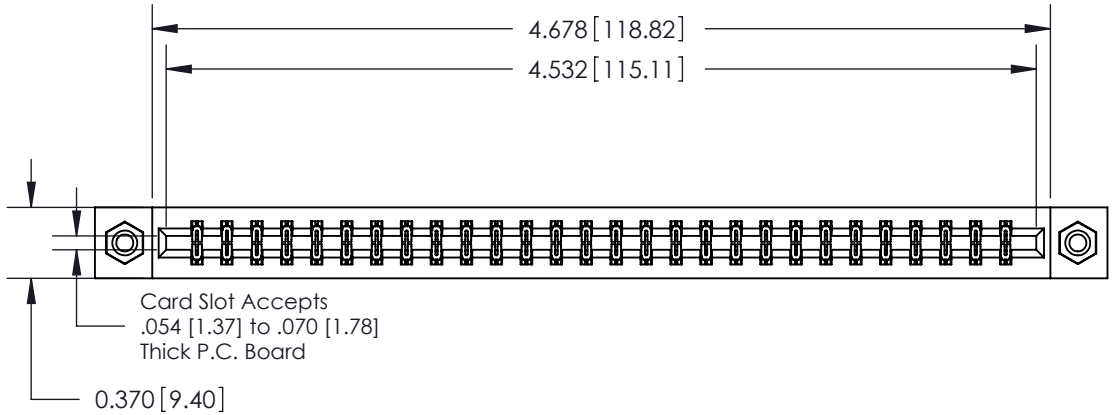

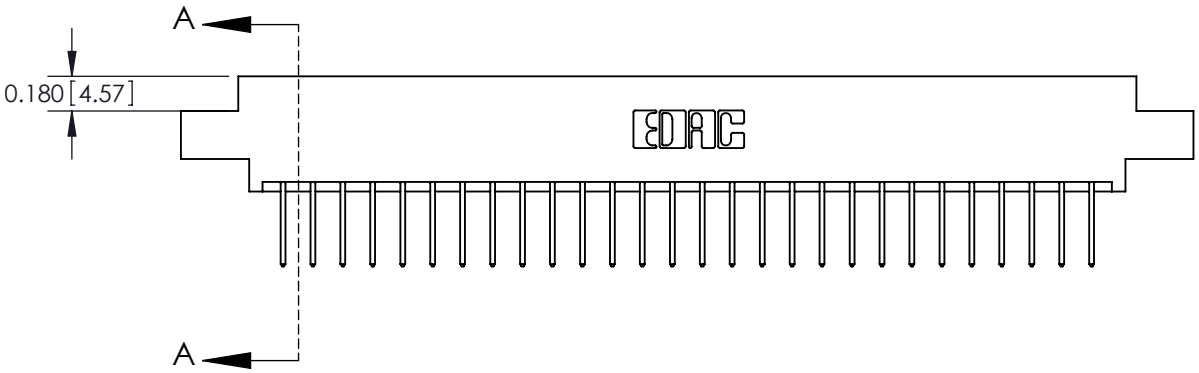

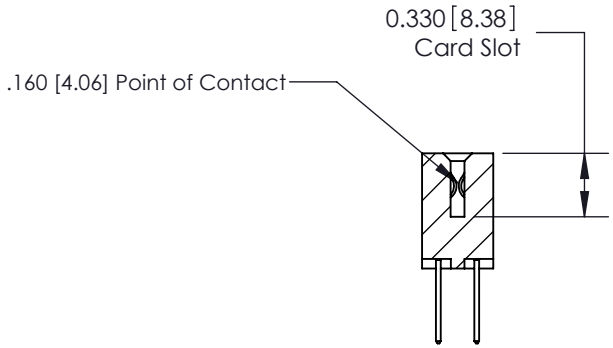

SECTION A-A

See Accompanying Pages for:
- **Contact Bend Details**

837/887 Series High Temp Card Edge Connector
Part Number: 887-056-523-808

EDAC INC
TORONTO, ONTARIO
CANADA
YOUR CONNECTION TO QUALITY & SERVICE

THESE DRAWINGS AND SPECIFICATIONS ARE THE PROPERTY OF EDAC INC.,AND SHALL NOT BE REPRODUCED,OR COPIED OR USED AS THE BASIS FOR THE MANUFACTURE OR SALE OF APPARATUS WITHOUT WRITTEN PERMISSION.

ACAD REFERENCE NO.	837 ENG MASTER		
DRAWN: J.LEE		DATE: OCT. 06/09	
CHECKED:		DATE:	
SCALE: NTS		SHEET 1 OF 2	
DRAWING NUMBER			ISSUE
837 Assembly			1

THIS IS A C.A.D. GENERATED DRAWING
DO NOT MAKE MANUAL REVISIONS TO MASTER.

ISSUE NUMBER	
ORIGINAL	1

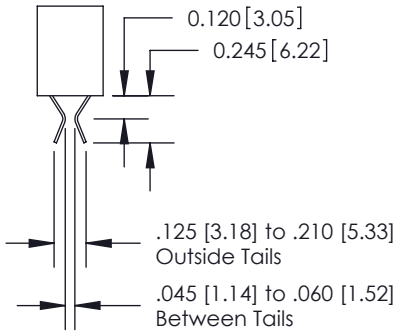

555 Contact Code

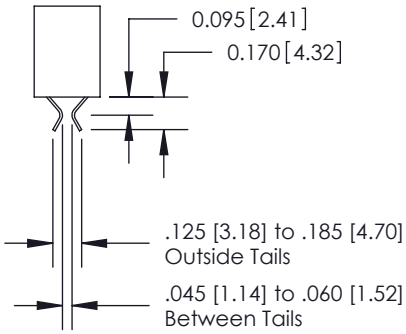

556 Contact Code

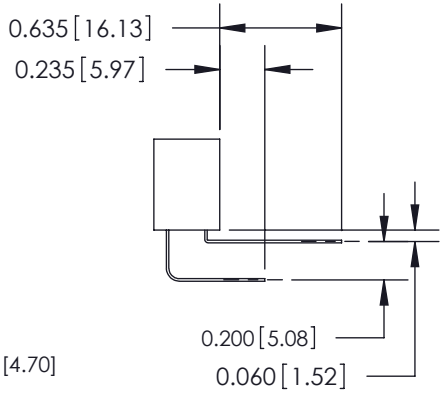

558 Contact Code

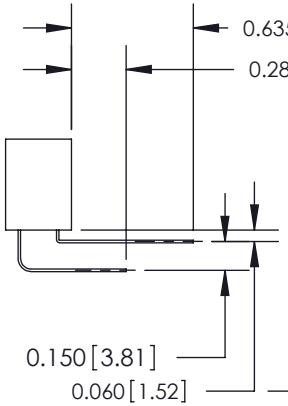

559 Contact Code

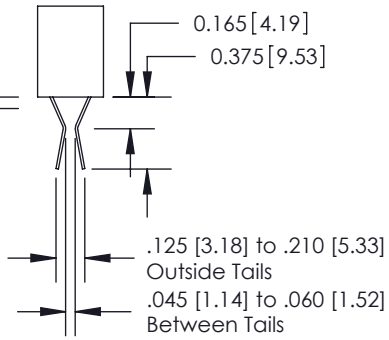

560 Contact Code

837/887 Series High Temp Card Edge Connector Contact Bend Detail

ACAD REFERENCE NO.	837 ENG MASTER		
DRAWN: J.LEE	DATE: OCT. 06/09		
CHECKED:	DATE:		
SCALE: NTS	SHEET 2 OF 2		
DRAWING NUMBER	ISSUE		
837 Assembly	1		

EDAC INC
TORONTO, ONTARIO
CANADA
YOUR CONNECTION TO QUALITY & SERVICE

THESE DRAWINGS AND SPECIFICATIONS ARE THE PROPERTY OF EDAC INC.,AND SHALL NOT BE REPRODUCED,OR COPIED OR USED AS THE BASIS FOR THE MANUFACTURE OR SALE OF APPARATUS WITHOUT WRITTEN PERMISSION.