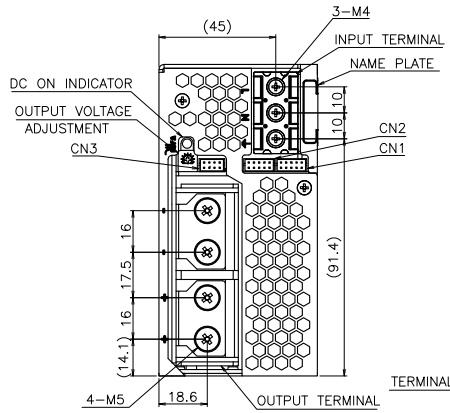

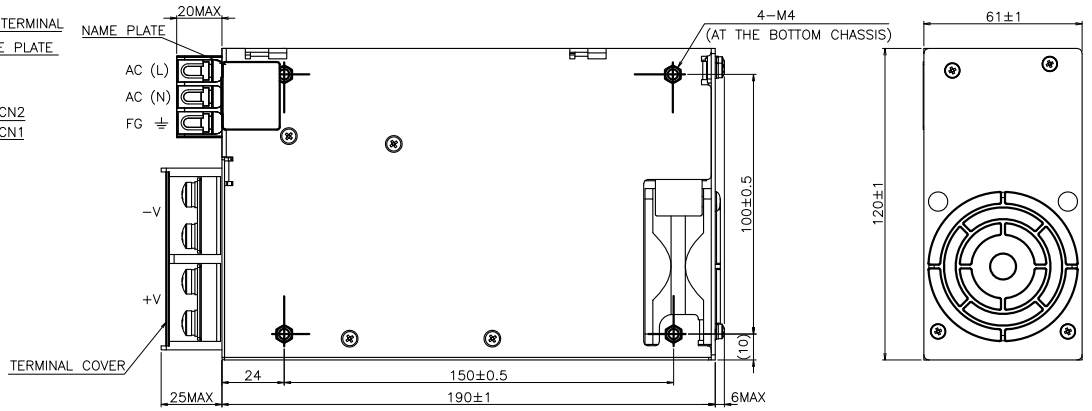

NAME PLATE (SCALE: 1:1)

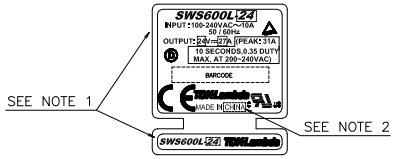

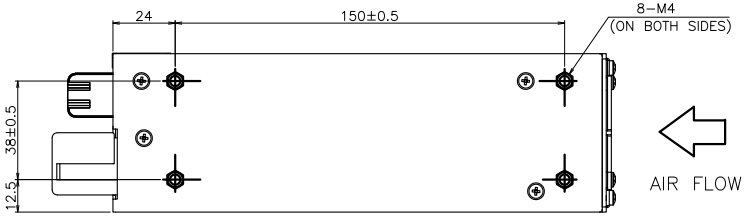

SIGNAL CONNECTOR INFORMATION

PIN CONFIGURATION AND FUNCTIONS OF CN1,CN2

PIN No.	FUNCTION	
1	+Vm	: +OUTPUT VOLTAGE MONITOR
2	+S	: +SENSING
3	−Vm	: −OUTPUT VOLTAGE MONITOR
4	−S	: −SENSING
5	N.C.	: NO CONNECTION
6	PC	: CURRENT BALANCE
7	PV	: ADJUSTMENT OF OUTPUT VOLTAGE
8	COM	: GROUND FOR PC AND PV SIGNAL
9	CNT2	: REMOTE ON/OFF 2
10	TOG	: GROUND FOR CNT2

PIN CONFIGURATION AND FUNCTIONS OF CN3

PIN No.	FUNCTION	
1	COM	: GROUND FOR PC AND PV SIGNAL
2	COM	: GROUND FOR PC AND PV SIGNAL
3	AUX	: AUXILIARY OUTPUT (12V 0.1A)
4	CNT1	: REMOTE ON/OFF 1
5	G2	: GROUND FOR AUX AND CNT1
6	G2	: GROUND FOR AUX AND CNT1
7	ALM	: ALARM
8	G1	: ALARM GROUND

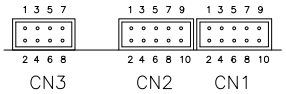

SIGNAL CONNECTOR USED

PART DESCRIPTION	PART NAME	MANUFACT
PIN HEADER	S10B−PHDSS (CN1,CN2) S8B−PHDSS (CN3)	JST

MATCHING HOUSINGS, PIN & TOOL

PART DESCRIPTION	PART NAME	MANUFACT
SOCKET HOUSING	PHDR−10VS (CN1,CN2) PHDR−8VS (CN3)	JST
TERMINAL PINS	SPHD−002T−P05(AWG28~24) SPHD−001T−P05(AWG26~22)	JST
HAND CRIMPING TOOL	YRS−620(SPHD−002T−P0.5) YC−610R(SPHD−001T−P0.5)	JST

NOTE:

1: MODEL NAME, INPUT VOLTAGE RANGE, NOMINAL OUTPUT VOLTAGE, NOMINAL OUTPUT CURRENT AND PEAK OUTPUT CURRENT ARE SHOWN ON THE NAME PLATE IN ACCORDANCE WITH THE SPECIFICATIONS.
2: COUNTRY OF MANUFACTURE IS SHOWN ON THE NAME PLATE IN ACCORDANCE WITH THE SPECIFICATIONS.
3: M4 TAPPED HOLES (12) FOR CUSTOMER CHASSIS MOUTING (SCREW PENETRATION DEPTH 6m/m MAX.).
4: RECOMMENDED SCREW TORQUE:
OUTPUT TERMINAL(M5 SCREW) = 2.5N·m
INPUT TERMINAL(M4 SCREW) = 1.27N·m

(unit : mm)

MODEL NAME	SWS600L
TDK-Lambda	

CA757−02−01D