MATERIAL NO.	ENGINEERING NO.	FINISHED LENGTH
1300611029	103000K20M010E	3 FT 3 IN (1M)
1300611096	103000K20M050G	16 FT 4.9 IN (5M)
1300611033	103000K20M200E	65 FT 6 IN (20M)

C

CABLE LENGTH TOLERANCES
<.3M [1FT]: +19mm-0 [+.75in-0]
.3 - .9M [1 - 3FT]: +44.5mm-0 [+1.75in-0]
.9 - 1.8M [3 - 6FT]: +55.6mm-0 [+2.19in-0]
1.8 - 3.7M [6 - 12FT: +88.9mm-0 [+3.50in-0]
3.7 - 7.3M [12 - 24FT]: +165.1mm-0 [+6.50in-0]
7.3-14.6M [24 - 48FT]: +317.5mm-0 [+12.50in-0]
14.6 - 30.5M [48-100FT]: +622.3mm-0 [+24.50in-0]
OVER 30M [100FT] +2% OF FINISHED LENGTH

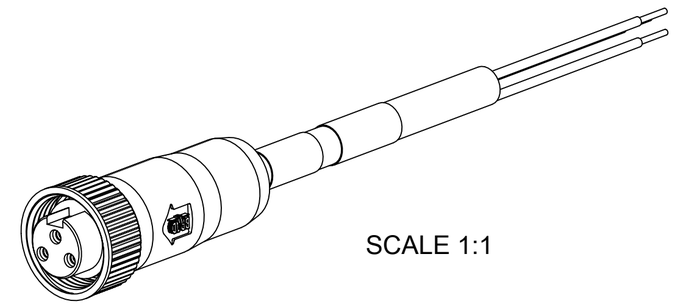

SCALE 1:1

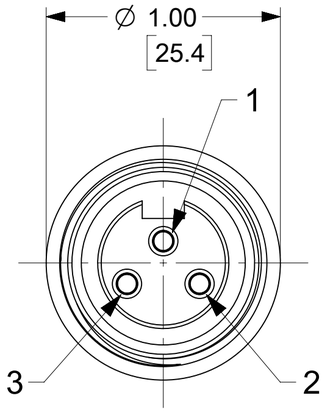

FEMALE FACE VIEW

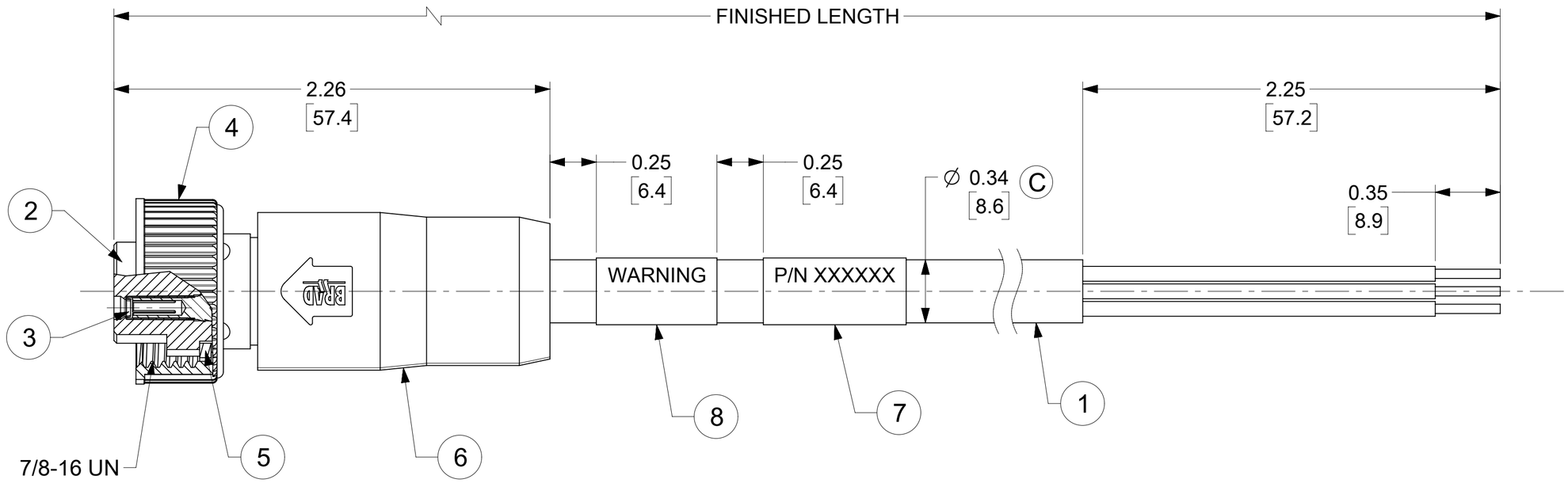

NOTES:
1. MATERIAL: AS NOTED
2. FINISH: AS NOTED
3. ELECTRICAL:
   VOLTAGE: 500V PER IEC60664
   600V PER UL2237
   CURRENT: 15A
4. TEMP RATING: -20°C TO +90°C
5. PROTECTION: IP67 (WHEN MATED)
6. UL LISTED FILE: 258922
7. ALL DIMS ARE FOR REFERENCE UNLESS TOLERANCED OR NOTED OTHERWISE

WIRING DIAGRAM

S1

1	GREEN/YELLOW
2	BLACK
3	WHITE

PART NUMBER LEGEND C

103000K20M010E

OVERMOLD
E=RED
G=BLACK

FINISHED LENGTH
M001 = 0.1 METER
M010 = 1 METERS
M100 = 10 METERS

ITEM	DESCRIPTION	MATERIAL	FINISH	
8	WARNING LABEL	VINYL	BLACK/ORANGE	
7	WRAP LABEL	VINYL	BLACK/YELLOW	
6	OVERMOLD	TPE	BLACK	C
5	FRICTION RING	NYLON	WHITE	
4	COUPLING NUT	ZINC DIE-CAST	BLACK E-COAT	
3	SOCKET CONTACT	Cu ALLOY	GOLD PLATED	
2	FEMALE INSERT	TPE	BLACK	C
1	CABLE, 14 AWG TC-ER	TPE	BLACK	

DOCUMENT STATUS	P1	RELEASE DATE	2022/06/14 13:48:40

FUNCTIONAL SYMBOLS
FA = 0
FC = 0
FP = 0
DIVISIONAL SYMBOLS

THIS DRAWING CONTAINS INFORMATION THAT IS PROPRIETARY TO MOLEX ELECTRONIC TECHNOLOGIES, LLC AND SHOULD NOT BE USED WITHOUT WRITTEN PERMISSION

DIMENSION UNITS: INCH/MM
SCALE: 2:1

GENERAL TOLERANCES (UNLESS SPECIFIED)

	MM	INCH
4 PLACES	±	±
3 PLACES	±	±
2 PLACES	±	±
1 PLACE	±	±
0 PLACES	±	±
ANGULAR TOL	± °	

DRAFT WHERE APPLICABLE MUST REMAIN WITHIN DIMENSIONS

CURRENT REV DESC: ITEM #2 & 6 WERE PVC, MODFIED MATERIAL TABLE & ADDED CABLE DIA.

EC NO: 709714
DRWN: VHANDI 2020/05/13
CHK'D: RSTONE 2022/06/08
APPR: BWOODMAN 2022/06/14

INITIAL REVISION:
DRWN: RSTONE 2015/11/09
APPR: BWOODMAN 2015/12/04

THIRD ANGLE PROJECTION | DRAWING: C-SIZE | SERIES: 130061

molex

BRAD POWER CORDSET, A SIZE
3 POLE, FEMALE, STRAIGHT, SINGLE KEY, 14 AWG

PRODUCT CUSTOMER DRAWING

DOCUMENT NUMBER	DOC TYPE	DOC PART	REVISION
SD-130061-032	PSD	001	C

MATERIAL NUMBER	CUSTOMER	SHEET NUMBER
SEE TABLE	GENERAL MARKET	1 OF 1

FORMAT: Eng-tega-master-lb-prod-C
REVISION: E
DATE: 2020/01/14