MATERIAL #	ENGINEERING #
1300851106	1476054040V0389

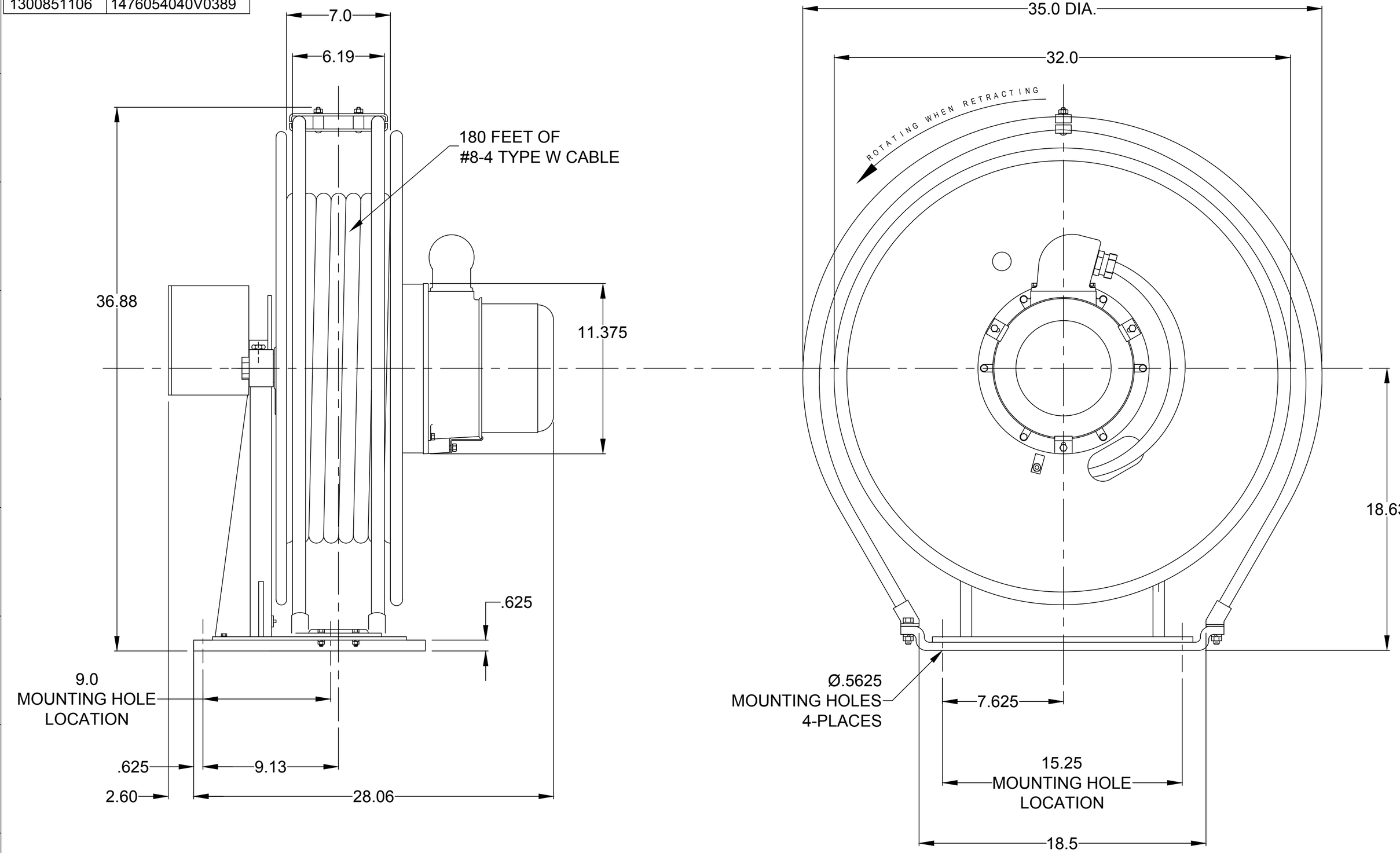

RELEASE SALES DWG
EC NO: IPG2016-0529
DRWN: HRUIZ01 2015/10/07
CH'KD: HKNEELAN 2015/10/07
APPR: JFMURPHY 2015/11/19
DESCRIPTION
REV A

QUALITY SYMBOL
▼=0
(C)=0

GENERAL TOLERANCES (UNLESS SPECIFIED)	mm	INCH
4 PLACES	±---	±---
3 PLACES	±---	±.005
2 PLACES	±---	±.010
1 PLACE	±---	±.020
ANGULAR ±1/2°		

DRAFT WHERE APPLICABLE MUST REMAIN WITHIN DIMENSIONS

DIMENSION STYLE: INCH
SCALE: NTS
DESIGN UNITS: INCH
THIRD ANGLE PROJECTION

DRAWN BY: HRUIZ01 DATE: 2015/10/07
CHECKED BY: HKNEELAN DATE: 2015/10/07
APPROVED BY: JFMURPHY DATE: 2015/11/19

TITLE
14760540405 CABLE REEL
180 FEET #8-4 TYPE W
---

molex MOLEX INCORPORATED

MATERIAL NO. 1300851106
DOCUMENT NO. SD-130085-012
SHEET NO. 1 0F 1
SIZE C

THIS DRAWING CONTAINS INFORMATION THAT IS PROPRIETARY TO MOLEX INCORPORATED AND SHOULD NOT BE USED WITHOUT WRITTEN PERMISSION