TOP VIEW

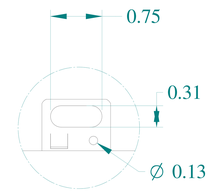

DETAIL Z
TYP

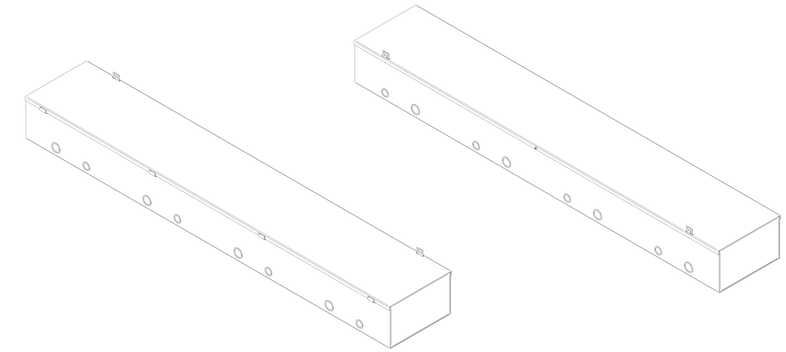

ISOMETRIC VIEWS

SIDE VIEW

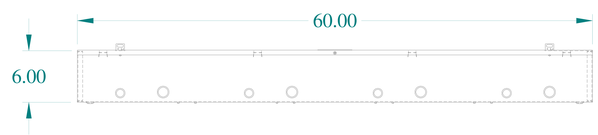

FRONT VIEW

SIDE VIEW

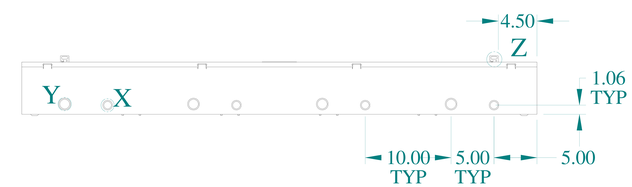

BACK VIEW

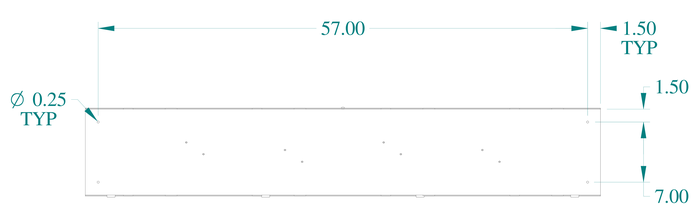

BOTTOM VIEW

DETAIL Y
TYP

DETAIL X
TYP

HAMMOND MANUFACTURING®

www.hammondmfg.com

Data subject to change without notice.

Part # : CST5604	Date : Mar. 24, 2019

Link:www.hammfg.com/CST5604