THIS DOCUMENT IS THE PROPERTY OF KEYSTONE ELECTRONICS CORP. AND SHALL NOT BE REPRODUCED, DISTRIBUTED OR USED AS A BASIS FOR MANUFACTURE WITHOUT PRIOR WRITTEN PERMISSION FROM KEYSTONE ELECTRONICS CORP.

ACTUAL SIZE

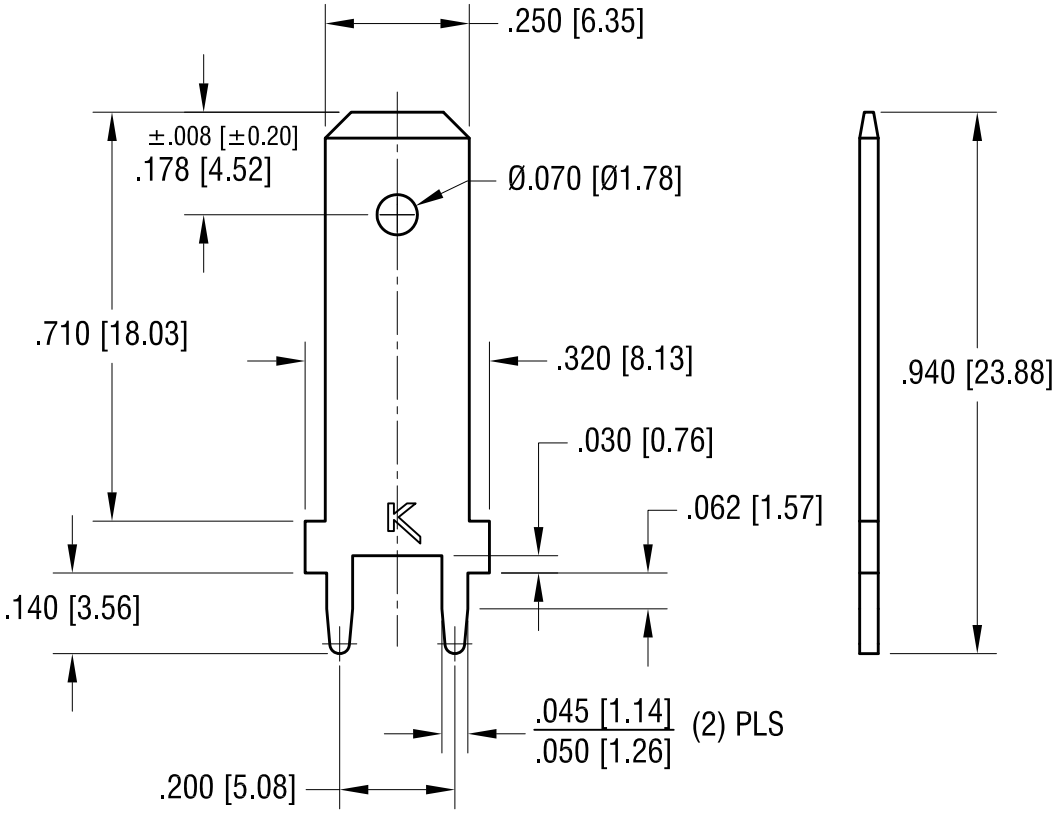

DATE	DESCRIPTION	REV.
1.22.20	CHANGE AS PER ECN 20–005	C
8.30.12	CHANGE AS PER ECN 12–123	B
3.20.09	CHANGE AS PER ECN 09–19	A

KEYSTONE ELECTRONICS CORP.

www.keyelco.com • NEW HYDE PARK, NY 11040 • Tel (516) 328-7500

PART NAME	PC QUICK-FIT TERMINAL		
MATERIAL	.032 [0.81] TH'K BRASS		
FINISH	MATTE TIN PLATE	DRN BY NT	DATE 1.05.09
		APP'D RH	SCALE 3X
TOLERANCES INCH [MM] DECIMAL ± .005 [± 0.13] ANGULAR ± 1° UNLESS OTHERWISE SPECIFIED	CODE C	DWG NO. 1292	