Schematic for the NCP1523B Evaluation Board

ON Semiconductor®
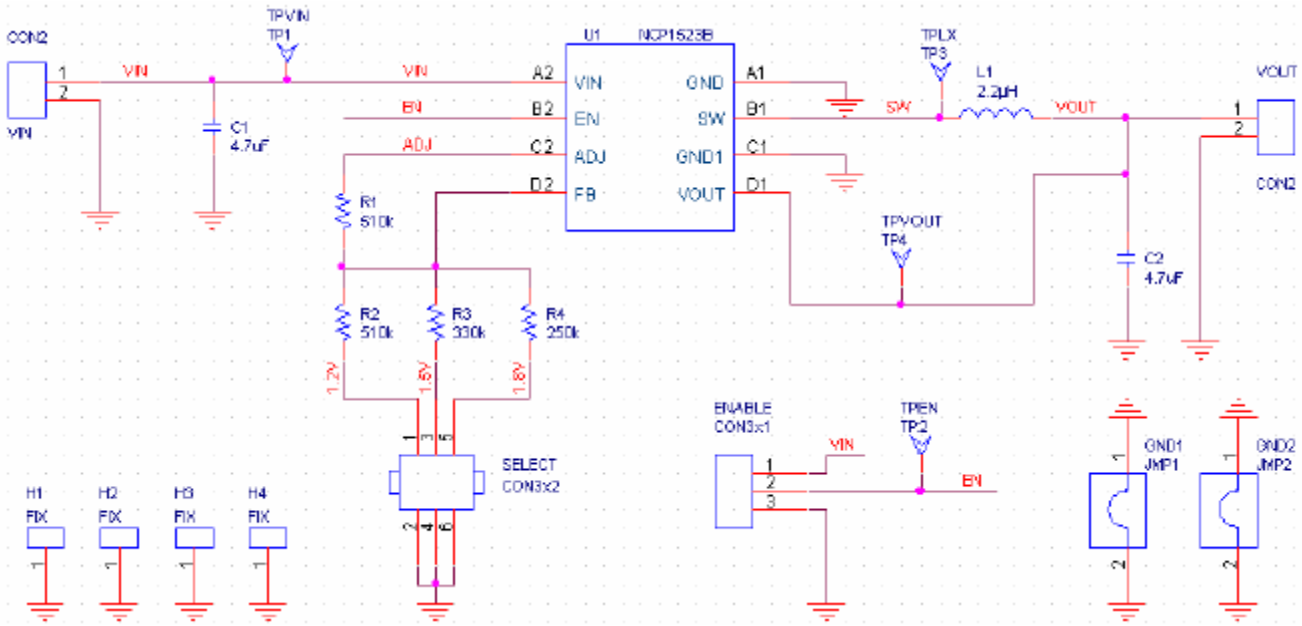
12/15/2006