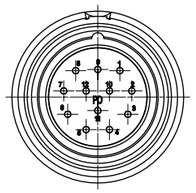

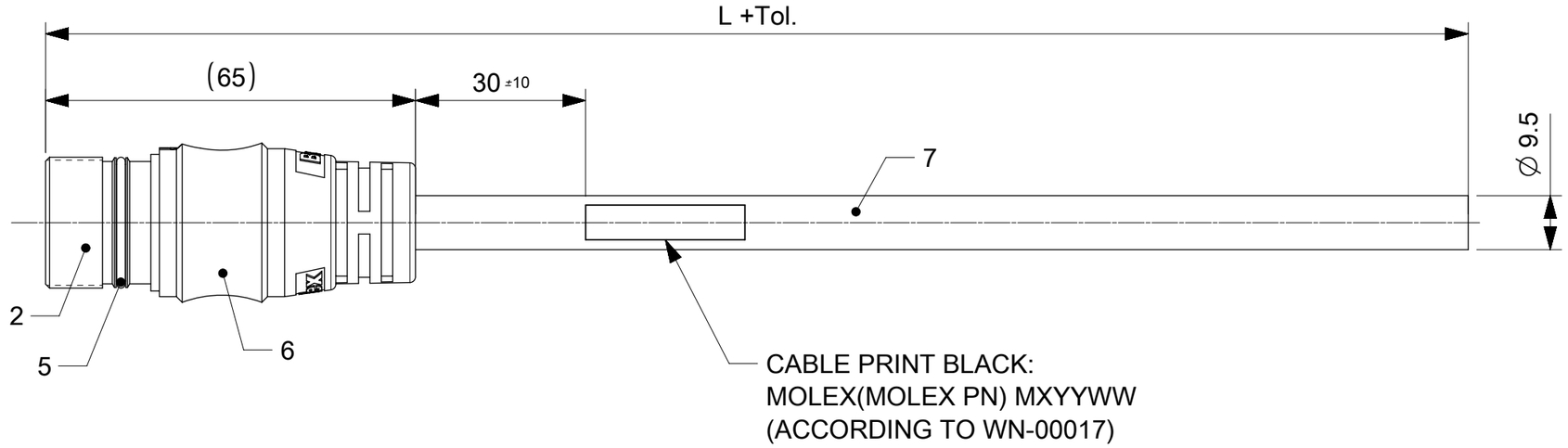

Technical Data:

Contact ∅ [mm]	1
Nominal current [A]	9 (for 0.50mm²) / 5 (for 0.38mm²)
Nominal voltage [V~]	200
Degree of pollution	3
Test voltage [V~]	1500
Max. contact resistance [mΩ]	3
Insulation resistance [MΩ]	100
Protection	IP67 (connected)
Temperature range (fixed)	-40°C to 90°C
Temperature range (flex)	-25°C to 80°C

Product Specification 1204901707
Electrical Test according to 1204900051

Packaging:
The cordsets delivered packed into Carton.

Connector pin assignment
Plug M23 12P MA

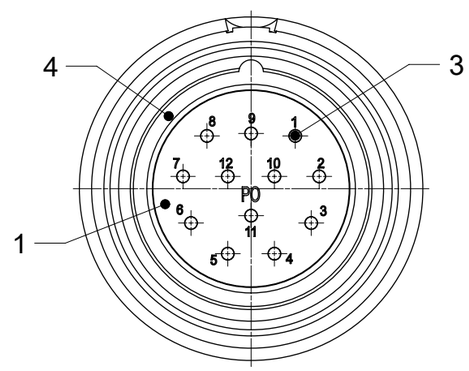

SCALE 2:1

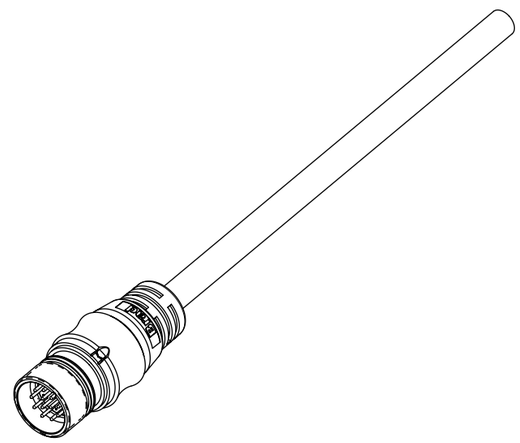

SCALE 1:2

TABLE 1

MOLEX PN	ENGINEERING No.	L [mm]	Tol. [mm]
1204900121	K0SCS06W09M010	1000	+40
1204900122	K0SCS06W09M020	2000	+60
1204900123	K0SCS06W09M030	3000	+60
1204900124	K0SCS06W09M040	4000	+60
1204900125	K0SCS06W09M050	5000	+60
1204900126	K0SCS06W09M100	10000	+80
1204900127	K0SCS06W09M150	15000	+140
1204900128	K0SCS06W09M200	20000	+140

DOCUMENT STATUS	P1	RELEASE DATE	2019/11/28 13:18:25

THIS DRAWING CONTAINS INFORMATION THAT IS PROPRIETARY TO MOLEX ELECTRONIC TECHNOLOGIES, LLC AND SHOULD NOT BE USED WITHOUT WRITTEN PERMISSION

SYMBOLS: E = 0, C = 0, B = 0, S = 0, ▼ = 0, C = 0, ☒ = 0, ■ = 0, ▽ = 0

DIMENSION UNITS: mm
SCALE: 1:1
GENERAL TOLERANCES (UNLESS SPECIFIED)
ANGULAR TOL ± 1.0 °
4 PLACES ±
3 PLACES ±
2 PLACES ± 0.05
1 PLACE ± 0.3
0 PLACES ± 0.5
DRAFT WHERE APPLICABLE MUST REMAIN WITHIN DIMENSIONS

CURRENT REV DESC:
EC NO: 628246
DRWN: SSM 2019/11/27
CHK'D: RSILLER 2019/11/28
APPR: RSILLER 2019/11/28
INITIAL REVISION:
DRWN: FGAIK 2016/12/14
APPR: RSILLER 2017/02/02

THIRD ANGLE PROJECTION
DRAWING: A3-SIZE
SERIES: 120490

molex

CSE M23 12P SC MA STR WSOR XM SHLD

PRODUCT CUSTOMER DRAWING

DOCUMENT NUMBER	DOC TYPE	DOC PART	REVISION
1204900121	PSD	000	A3

MATERIAL NUMBER	CUSTOMER	SHEET NUMBER
SEE TABLE 1	GENERAL MARKET	1 OF 2

FORMAT: master Sheet A3
REVISION: H
DATE: 2018/01/16

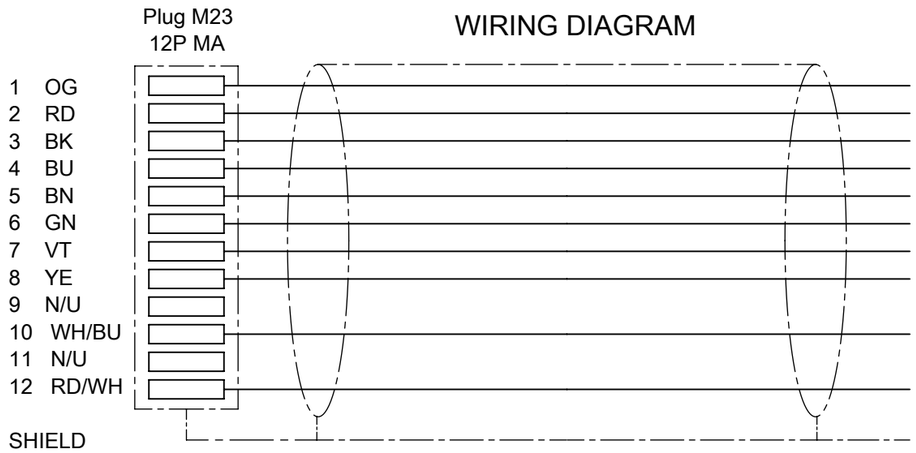

TABLE 2

ITEM	QTY	DESCRIPTION	MATERIAL	FINISH
1	1	INSERT M23 MALE 12P BLACK	PA66	-
2	1	SHELL M23 MALE	BRASS	NICKEL PLATED
3	12	CONTACT 10 MALE	BRASS	GOLD
4	1	GASKET OR 17X2 BLACK	NBR	-
5	1	GASKET OR 20X1.5 BLACK	NBR	-
6	-	OVERMOLD BLACK	TPU	-
7	-	CABLE 4x2x0.38+4x0.5 GREEN	WSOR	-

THIS DRAWING CONTAINS INFORMATION THAT IS PROPRIETARY TO MOLEX ELECTRONIC TECHNOLOGIES, LLC AND SHOULD NOT BE USED WITHOUT WRITTEN PERMISSION

SYMBOLS: = 0 / = 0 / = 0 / = 0 / = 0 / = 0 / = 0 / = 0 / = 0

DIMENSION UNITS: mm
SCALE: 1:1
GENERAL TOLERANCES (UNLESS SPECIFIED)
ANGULAR TOL ± 1.0 °
4 PLACES ±
3 PLACES ±
2 PLACES ± 0.05
1 PLACE ± 0.3
0 PLACES ± 0.5
DRAFT WHERE APPLICABLE MUST REMAIN WITHIN DIMENSIONS

CURRENT REV DESC:
EC NO: 628246
DRWN: SSM 2019/11/27
CHK'D: RSILLER 2019/11/28
APPR: RSILLER 2019/11/28

INITIAL REVISION:
DRWN: FGAIK 2016/12/14
APPR: RSILLER 2017/02/02

THIRD ANGLE PROJECTION
DRAWING: A3-SIZE
SERIES: 120490

molex

CSE M23 12P SC MA STR WSOR XM SHLD

PRODUCT CUSTOMER DRAWING

DOCUMENT NUMBER	DOC TYPE	DOC PART	REVISION
1204900121	PSD	000	A3

MATERIAL NUMBER	CUSTOMER	SHEET NUMBER
SEE SHEET 1	GENERAL MARKET	2 OF 2

DOCUMENT STATUS	P1	RELEASE DATE	2019/11/28 13:18:25

FORMAT: master-tb-prod-A3
REVISION: H
DATE: 2018/01/18