| REV. | ECN NO. | DESCRIPTION | SIGN | DATE |
|---|---|---|---|---|
| C1 | N/A | INITIAL DRAWING | Yumer | 2020/04/17 |
| | | | | |

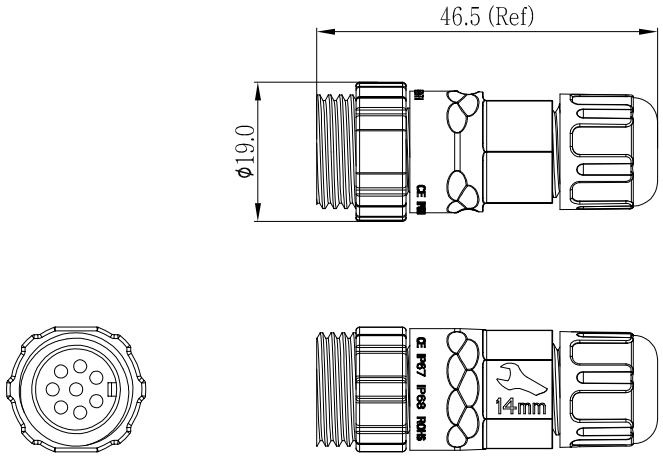


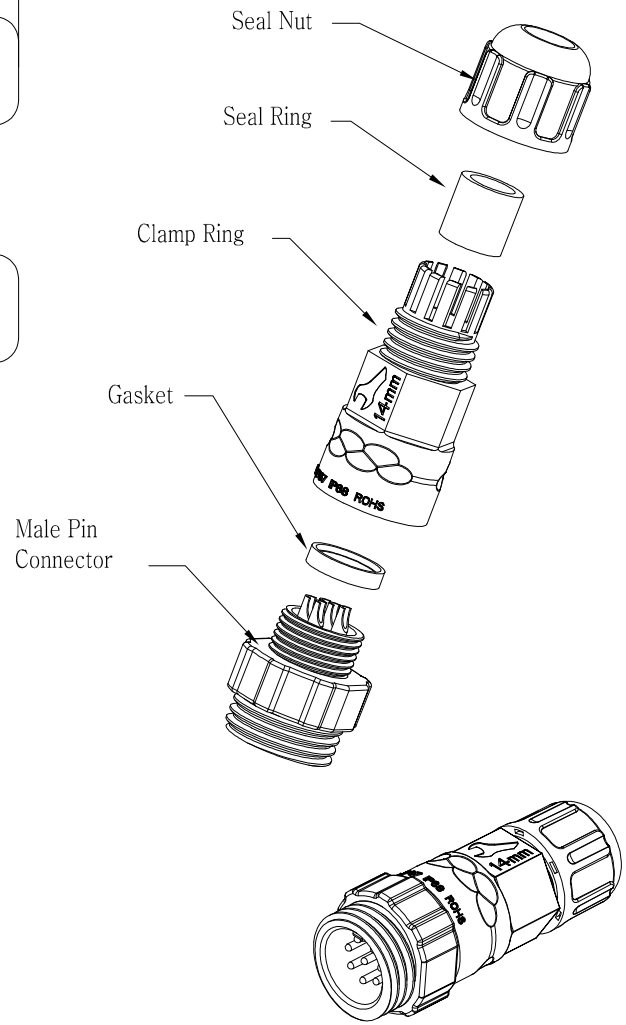


Specification:
1.Operation Temperature:-45°C~105°C.
2.Insulation Resistance:100MΩ at DC500V.
3.Contact Resistance:<10mΩ.
4.Withstand Voltage: 1300V AC
5.Operating Current:5A
6.Operating Voltage:AC 60V
7.Waterproof Rate:IP67 (Mated)
8.Seal Nut:Nylon, Black
9.Seal Ring:Silicon, Black.
10.Clamp Ring:Nylon, Black
11.Gasket:Silicon, Red
12.Male Pin:Copper Alloy, Gold Plated
13.Connector:Nylon+ GF, Black
14.RoHS Compliant.
15.UL Compliant.
16.Cable Range OD:ϕ3.5mm~ϕ6.8mm
17.Mating Cap:806-00060-01

22XXX331-01
Pin Number

| 5 Pin | 6 Pin | 8 Pin |
|---|---|---|
| P/N: 22005311-01 | P/N: 22006311-01 | P/N: 22008311-01 |

Pin Assignments Front View

| | | | | | |
|---|---|---|---|---|---|
| UNIT:mm | DESCRIPTION: Standard Series Screw Female Plug With Male Pin | | PART NO: 22XXX311-01 | DRAWN BY: Yumer | DATE: 2020/04/17 |
| TOLERANCE: .X ±0.25, .XX ±0.15, .XXX ±0.05, ANGLES ±1° | SCALE: 1:1 | SHEET: 1 OF 1 | DWG NO | CHECKED BY: Ivan | DATE: 2020/04/17 |
| | REV: C1 | SIZE: A4 | CUSTOMER | APPROVED BY: Panson | DATE: 2020/04/17 |
| | | * :Inspection Item | | | |

CHOGORI®

THIS INFORMATION IS CONFIDENTIAL AND IS DISCLOSED TO YOU ON CONDITION THAT NO FURTHER DISCLOSURE IS MADE BY YOU TO OTHER THAN CHOGORI PERSONNEL WITHOUT AUTHORIZATION FROM CHOGORI CORP.