NOTES:

1. MATERIALS AND FINISHES:
   BODY - BRASS, WHITE BRONZE PLATING
   CONTACT - BeCu, SILVER PLATING
   INSULATOR - PTFE, NATURAL

2. ELECTRICAL:
   A. IMPEDANCE: 50 OHM
   B. FREQUENCY RANGE: DC - 6 GHz
   C. VSWR(RETURN LOSS): 30 dB @ DC - 2 GHz
   25 dB @ 2 - 6 GHz
   D. INTERMODULATION 3RD ORDER: -166 dBc MAX. (2*43 dBm)
   D. DIELECTRIC WITHSTANDING VOLTAGE: 2500 VRMS, MIN.
   F. INSULATION RESISTANCE: 5000 MΩ MIN.

3. MECHANICAL:
   A. DURABILITY: 500 CYCLES MIN.
   B. TEMPERATURE RANGE: -55° C TO +100° C

4. PACKAGING:
   A. QUANTITY: SINGLE PACK
   B. MARKING: PACKAGING TO BE MARKED
   "AMPHENOL RF, AD-716P225J-1, DATE CODE"

THIRD ANGLE PROJ.

| REVISIONS | | | | |
|---|---|---|---|---|
| REV | DESCRIPTION | DATE | ECN | APPR |
| A | RELEASE TO MFG. | 12-Oct-18 | 09485 | SV |

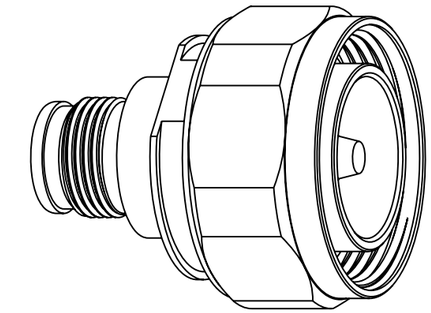

SCALE 1.500

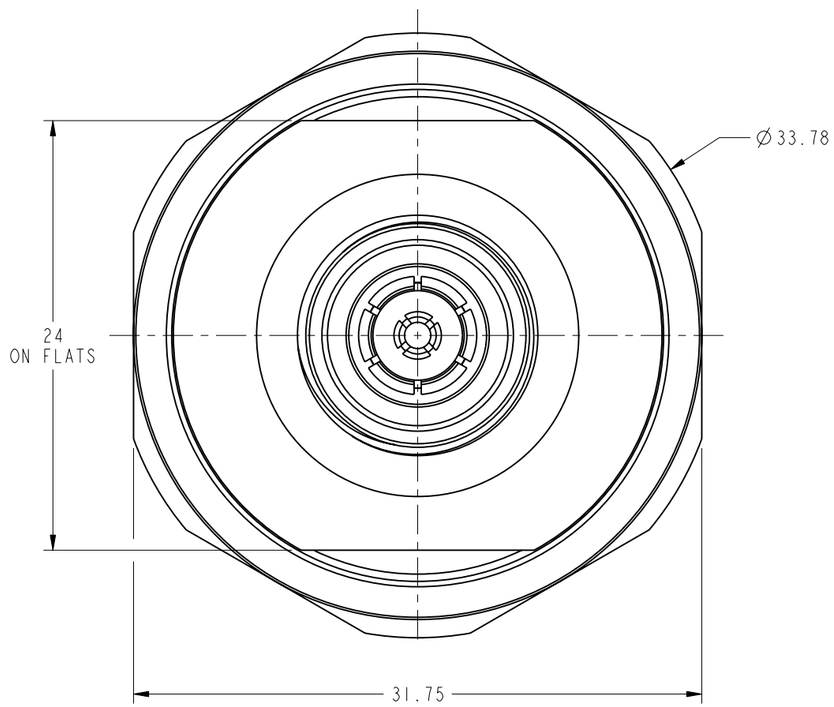


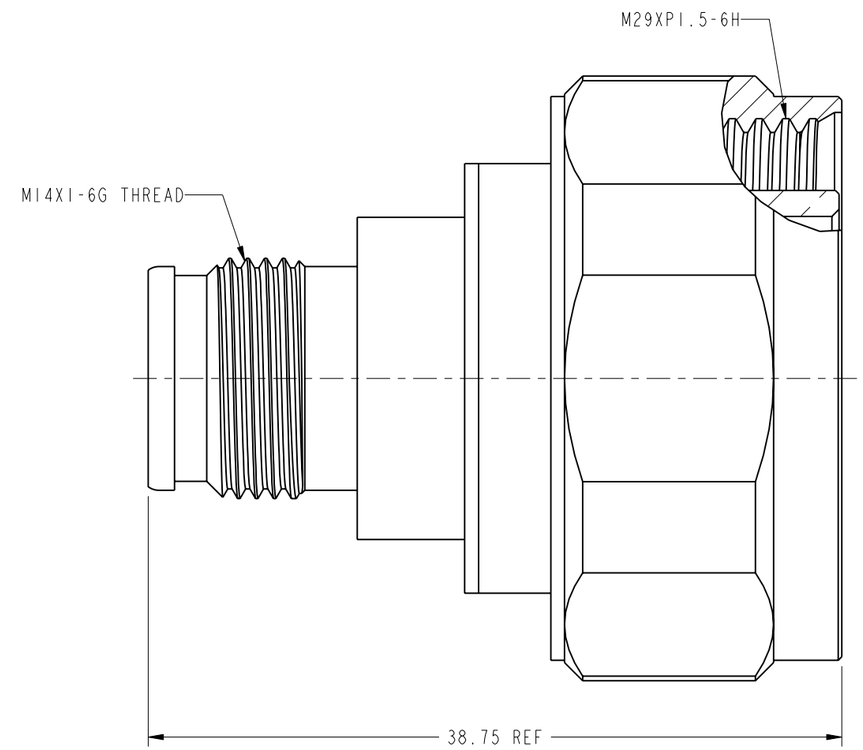


**CUSTOMER OUTLINE DRAWING**

ALL OTHER SHEETS ARE FOR INTERNAL USE ONLY

UNLESS OTHERWISE SPECIFIED, DIMENSIONS ARE IN METRIC AND TOLERANCES ARE:

| <0.5mm | 0.5 - 6mm | 6 - 30mm | 30 - 120mm | ANGLES |
|---|---|---|---|---|
| ± 0.05mm | ±0.1mm | ±0.2mm | ± 0.3mm | ±1° |

NOTICE - These drawings, specifications, or other data (1) are, and remain the property of Amphenol corp. (2) must be returned upon request; and (3) are confidential and not to be disclosed to any person other than those to whom they are given by Amphenol Corp. the furnishing of these drawings, specifications, or other data by Amphenol Corp., or to any other person to anyone for any purpose is not to be regarded by implication or otherwise in any manner licensing, granting rights to permitting such holder or any other person to manufacture, use or sell any product, process or design, patented or otherwise, that may in any way be related to or disclosed by said drawings, specifications, or other data.

MATERIAL
SEE NOTES

REFERENCE
EAR# 8104
REF: ---

CONFIGURATION LEVEL: In Work

FINISH

| | |
|---|---|
| DRAWN | DATE |
| K.SONG | 26-Oct-18 |
| ENGINEER | DATE |
| S.VO | 14-May-18 |
| APPROVED | DATE |
| S.HSIEH | 07-Nov-18 |
| CAD FILE | |

TITLE
2.2-5 JACK TO 7/16
PLUG ADAPTER

SCALE: 3.0:1.0 | SHEET 2 OF 2

| DWG SIZE | REV |
|---|---|
| B | A |

Amphenol RF
www.amphenolrf.com

DRAWING NO. AD-716P225J-1
ITEM NO. AD-716P225J-1
PART NO. AD-716P225J-1