ANATECH ELECTRONICS INC
RF & Microwave Filters & Products

1200 MHz LC Band Pass Filter

Part Number: AE1200B11286

ISO 9001 REGISTERED FIRM

Electrical specifications

Center Frequency: 1200 MHz
Frequency Range: 1000~1400 MHz
Bandwidth: 400 MHz
Insertion Loss: =/<1.0 dB
Return Loss: =/>14 dB
Rejection 1: =/>20 dB @ 450 MHz
Rejection 2: =/>20 dB @ 1650 MHz

Mechanical

Mounting Method: Threaded Mounting
Connector Type: SMA (F)
Dimensions: 1.50 x 0.75 x 0.50 Inches

Environmental

Operating Temperature: -45°C to +85°C
Storage Temperature: -55°C to +100°C

Outline Drawing:

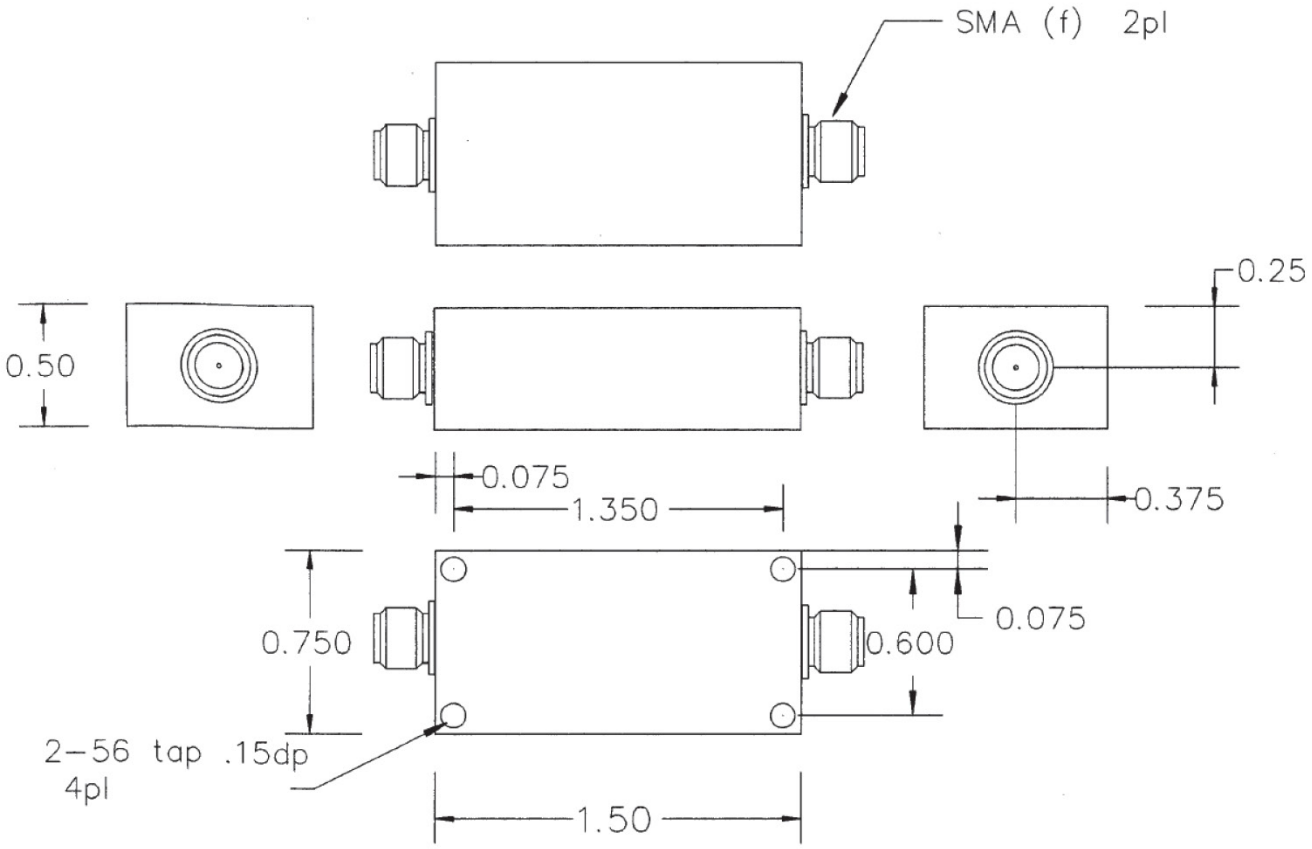

70 Outwater Lane Phone: (973) 772-4242
Garfield, NJ 07026 Fax : (973) 772-4646
Email: sales@anatechelectronics.com
Web: www.anatechelectronics.com