RFPC-TNC01-FN

CUSTOMER PRODUCT SPECIFICATION SHEET

RoHS Compliant

RFPC-TNC01-FN: TNC Right Angle Bulkhead Jack With O-ring, PCB Connector, Rated to IP67/68

Material and Plating:

Insulator A: Teflon
Insulator B: Teflon
Insulator C: Teflon
Body: Brass, Nickel Plated
Pin: Brass, Gold Plated
Center Pin: Phosphor Bronze, Gold Plated
O-Ring: Silicone, Color: Red
Cap: Brass, Gold Plated

Washer: Brass, Nickel Plated

Nut: Brass, Nickel Plated

Environmental:
A. Rated to:
  i. IP6x - Dust tight - no particle ingress.
  ii. IPx7 Waterproof for 30 minutes up to 1 meter underwater.
  iii. IPx8 Waterproof for 48 hours at 1 meter underwater.

Notes:
1. Working Frequency Range: DC-4GHz.
2. Impedance: 50ohm.
3. Operating Temperature: -55°C~+155°C.

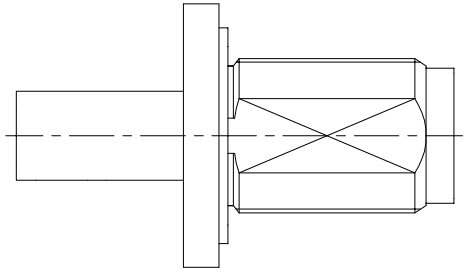

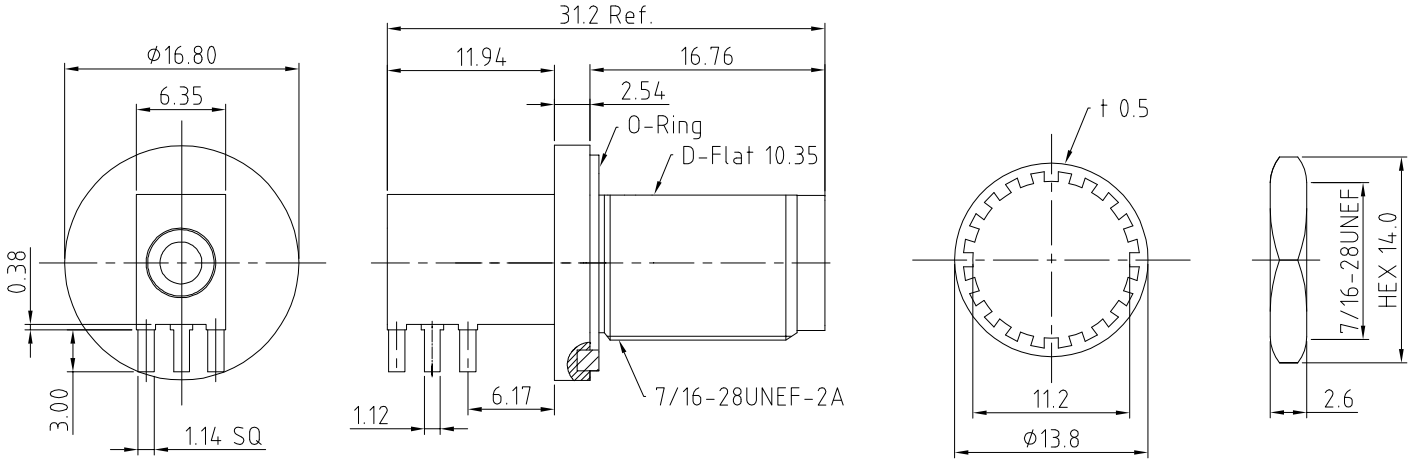

HOW TO ORDER

RFPC - TNC01 - FN - X

WASHER AND NUT OPTIONS:
BLANK = SEPARATELY PACKED (STANDARD)
A = ALL ASSEMBLED WITH CONNECTOR

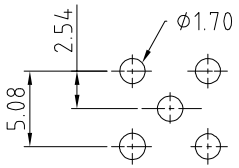

Recommended PCB Hole Layout

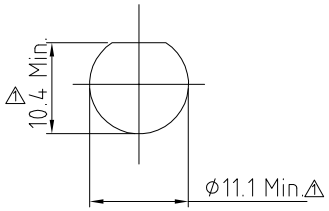

Recommended Mounting Hole

REV.	DATE & DRN	
1.0	25/03/'22 - NYW	RELEASE
1.1	11/04/'22 - NYW	AMEND WASHER & NUT PLATING
1.2	19/10/'22 - NYW	AMEND MOUNTING HOLE SIZE.

Scale: NTS	THIRD ANGLE	Unstated Tolerances: .X ±0.20, .XX ±0.20, .XXX ±0.20, ANGLES ±3°	
Drawn: NYW			
App'd: XXX	Title TNC PCB Connector		
Date: 19 OCT. '22	Revision: 1.2	Unit: mm	

NAUTILUS — IP67/68 Rated Cables

GRADCONN — www.gradconn.com

© THIS DRAWING IS CONFIDENTIAL AND MUST NOT BE COPIED OR DISCLOSED WITHOUT WRITTEN CONSENT

Type: RFPC-TNC01-FN

RFPC-TNC01-FN

Drawing Number:

Sheet 1 of 1

Drawing © E and O E