© 2022TE Connectivity. All Rights Reserved.

1	2367324-1	ROT-T*079-B1 A0281-B301 WITHOUT CAP	2
1	2367306-1	STATOR COMPLETE TYPE T1 CrMo	1
2367234-1	PARTNUMBER	DESCRIPTION	ITEM NO
-	REVISION OF EACH ASSY NO. (WHEN BLANK, USE DWG. REVISION)		
	PARTS LIST		

REVISIONS

P	LTR	DESCRIPTION	DATE	DWN	APVD
	A	ECR-19-014208	04FEB2020	GK	OD
	A1	ECR-22-156829	25OCT2022	Ka	HB

Achtung:
Die angegebenen Aderpaare sind einmal auf 25mm verseilt : blau und gelb / rot und schwarz / rotweiss und gelbweiss

Resolverstator u.-rotor nur paarig verwenden !

ATTENTION:
THE SPECIFIED CABLE PAIRS ARE TWISTED ONCE AT 25MM:
BLUE AND YELLOW / RED AND BLACK /
RED-WHITE AND YELLOW-WHITE

USE ONLY PAIRED STATOR AND ROTOR !

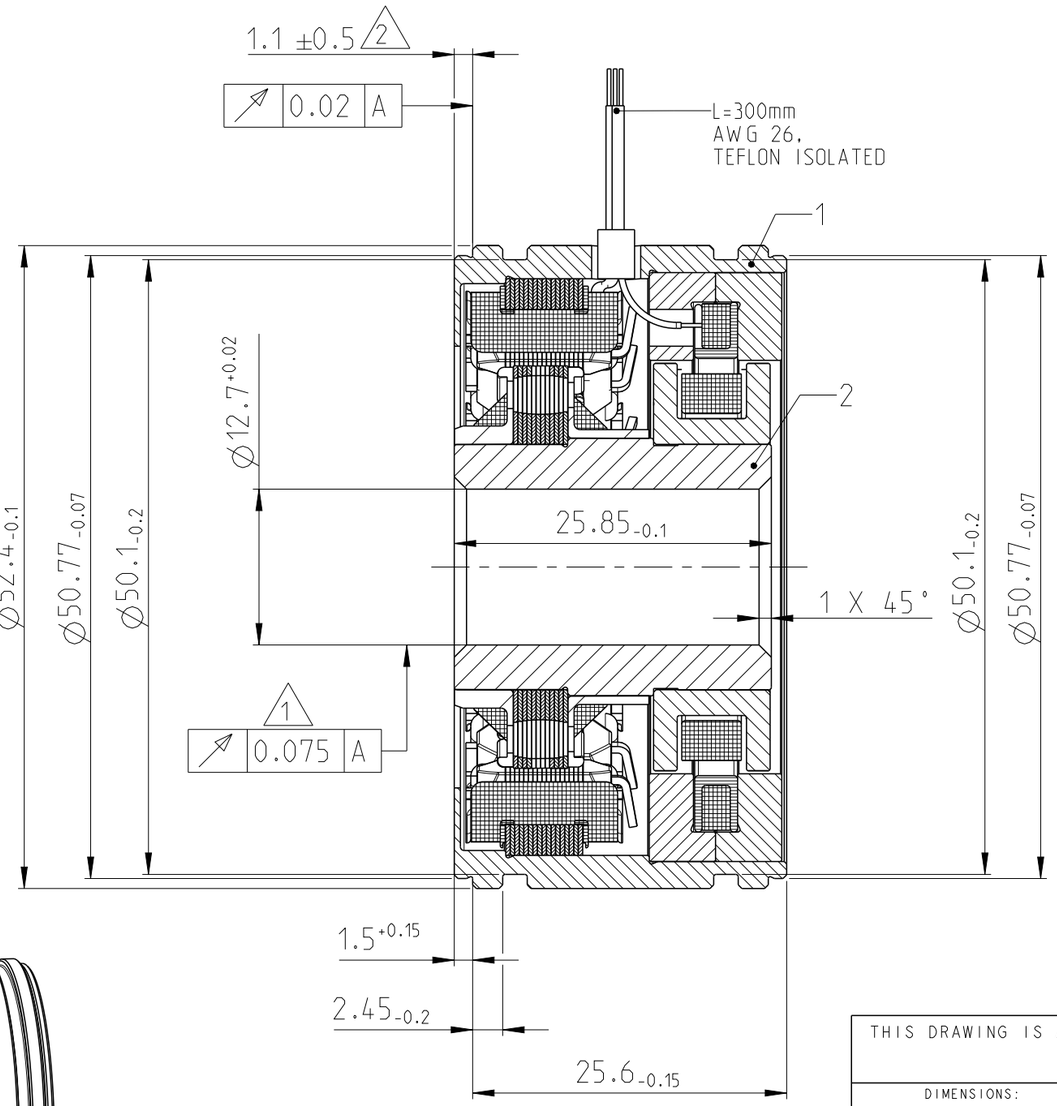

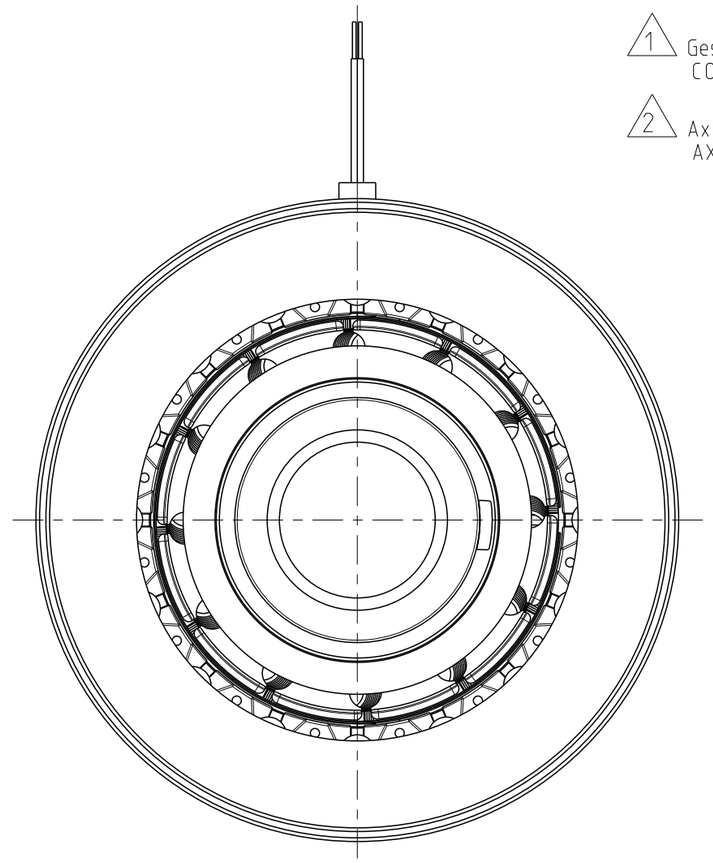

1 Gesamtschlag im eingebauten Zustand
CONCENTRICITY IN INSTALLED SITUATION

2 Axialversatz
AXIAL DISPLACEMENT

Signal	conductor colouring
S1(COS+)	RED
S2(SIN+)	YELLOW
S3(COS-)	BLACK
S4(SIN-)	BLUE
R1(REF+)	RED-WHITE
R2/R3(REF-)	YELLOW-WHITE

1:1

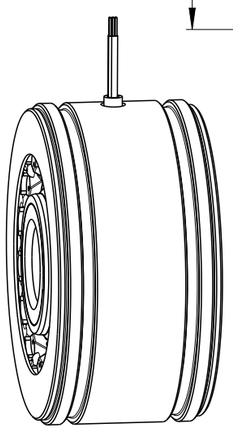

DIMENSIONS WITHOUT TOLERANCES : DIN ISO 2768-m

THIS DRAWING IS A CONTROLLED DOCUMENT.

DIMENSIONS: mm

TOLERANCES UNLESS OTHERWISE SPECIFIED:
0 PLC ±-
1 PLC ±-
2 PLC ±-
3 PLC ±-
4 PLC ±-
ANGLES ±1°

MATERIAL - -

FINISH - -

DWN GOPALAKRISHNA HV 20JAN2020
CHK SARFRAZ BILAL 20JAN2020
APVD ONDREJ DUSAN 20JAN2020
PRODUCT SPEC -
APPLICATION SPEC -
WEIGHT -

TE Connectivity

NAME
HOLLOW SHAFT RESOLVER /
SZ.21 TYPE T1 CrMo
V23401-T1079-B101

SIZE	CAGE CODE	DRAWING NO	RESTRICTED TO
A3	00779	C-2367234	-

CUSTOMER DRAWING

SCALE 2:1 SHEET 1 OF 1 REV A1

1470-19 (3/13)