TITLE PAGE

TABLE OF CONTENTS

PAGE	DESCRIPTION
1	TITLE PAGE
2	PMOD/Skywire
3	Power
4	Kurumi Adapter
XX	

Renesas RL78-G14 PMOD Adaptor.SchDoc

Power_4-0V_2A.SchDoc

Kurumi Adaptor.SchDoc

© NimbeLink Corp. 2016. All rights reserved.

NimbeLink Corp. provides this documentation in support of its products for the internal use of its current and prospective customers. The publication of this document does not create any other right or license in any party to use any content contained in or referred to in this document and any modification or redistribution of this document is not permitted.

While efforts are made to ensure accuracy, typographical and other errors may exist in this document. NimbeLink reserves the right to modify or discontinue its products and to modify this and any other product documentation at any time.

All NimbeLink products are sold subject to its published Terms and Conditions, subject to any separate terms agreed with its customers. No warranty of any type is extended by publication of this documentation, including, but not limited to, implied warranties of merchantability, fitness for a particular purpose and non-infringement.

Skywire and NimbeLink are trademarks of NimbeLink Corp. All other trademarks appearing in the document are the property of their respective owners.

IMPORTANT NOTES ABOUT THIS SCHEMATIC

DESIGN NOTE: Example text for the design note to show the note inside the colored box.

1) DESIGN NOTES in grey are information notes.

DESIGN NOTE: Example text for the design note to show the note inside the colored box.

2) DESIGN NOTES in red are critical, and must be understood and followed.

3) A red X indicates suppression of error checking on a pin/net. Commonly suppressed errors include: single-pin net, no driving source, etc.

4) All unique components in this schematic should have a manufacturer's part number displayed; exceptions to this rule are commodity passives such as resistors and capacitors.

5) Finally, population vs. non-population intent is indicated by adding "NP" next to the part. All parts with "NP" next to the part are intended to be unplaced during assembly.

© NimbeLink Corp. 2016. All rights reserved.

NimbeLink		www.nimbelink.com MINNEAPOLIS	
Title: TITLE			
Project: NL_BILLING_CODE		Size: C	Sheet 1 of 4
Number: NL_SCH_PN	Rev: NL_SCH_REV	Date: 3/22/2016	Time: 5:01:41 PM
Prepared for: NL_VERBOSE_CUST_NAME			CONFIDENTIAL

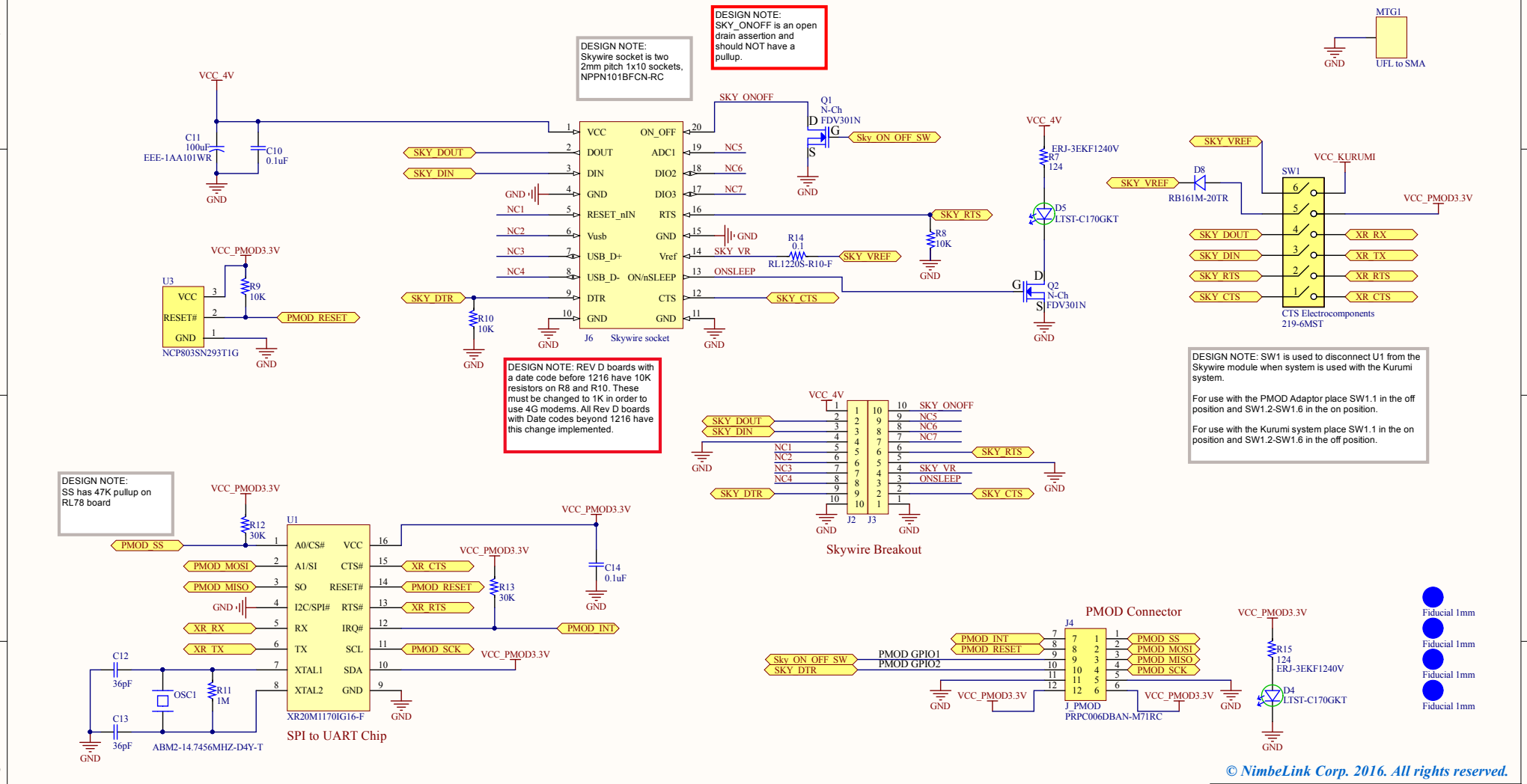
DESIGN NOTE: Skywire socket is two 2mm pitch 1x10 sockets, NPPN101BFCN-RC
DESIGN NOTE: SKY_ONOFF is an open drain assertion and should NOT have a pullup.
DESIGN NOTE: REV D boards with a date code before 1216 have 10K resistors on R8 and R10. These must be changed to 1K in order to use 4G modems. All Rev D boards with Date codes beyond 1216 have this change implemented.
DESIGN NOTE: SW1 is used to disconnect U1 from the Skywire module when system is used with the Kurumi system.
For use with the PMOD Adaptor place SW1.1 in the off position and SW1.2-SW1.6 in the on position.
For use with the Kurumi system place SW1.1 in the on position and SW1.2-SW1.6 in the off position.
DESIGN NOTE: SS has 47K pullup on RL78 board
VCC_4V
C11 100uF EEE-1AA101WR
C10 0.1uF
GND
SKY_DOUT
SKY_DIN
SKY_ONOFF
Q1 N-Ch FDV301N
Sky_ON_OFF_SW
VCC
DOUT
DIN
GND
RESET_nIN
Vusb
USB_D+
USB_D-
DTR
ON_OFF
ADC1
DIO2
DIO3
RTS
Vref
ON/nSLEEP
CTS
NC1
NC2
NC3
NC4
NC5
NC6
NC7
SKY_VR
ONSLEEP
SKY_RTS
SKY_CTS
SKY_DTR
R14 0.1 RL1220S-R10-F
SKY_VREF
R8 10K
R10 10K
J6 Skywire socket
VCC_PMOD3.3V
U3 NCP803SN293T1G
R9 10K
PMOD_RESET
VCC_4V
ERJ-3EKF1240V R7 124
D5 LTST-C170GKT
Q2 N-Ch FDV301N
MTG1
UFL to SMA
SKY_VREF
D8 RB161M-20TR
VCC_KURUMI
SW1
VCC_PMOD3.3V
XR_RX
XR_TX
XR_RTS
XR_CTS
CTS Electrocomponents 219-6MST
J2 J3
Skywire Breakout
R12 30K
U1
A0/CS#
A1/SI
SO
I2C/SPI#
RX
TX
XTAL1
XTAL2
CTS#
RESET#
RTS#
IRQ#
SCL
SDA
PMOD_SS
PMOD_MOSI
PMOD_MISO
PMOD_SCK
PMOD_INT
R13 30K
C14 0.1uF
C12 36pF
C13 36pF
OSC1
R11 1M
ABM2-14.7456MHZ-D4Y-T
XR20M1170IG16-F
SPI to UART Chip
PMOD Connector
J4
PMOD GPIO1
PMOD GPIO2
J_PMOD PRPC006DBAN-M71RC
R15 124 ERJ-3EKF1240V
D4 LTST-C170GKT
Fiducial 1mm
© NimbeLink Corp. 2016. All rights reserved.
Title: Renesas RL78-G14 PMOD Adaptor
Document Number: 20016
Revision
Date: 8/6/2014
Sheet: 2 of 4

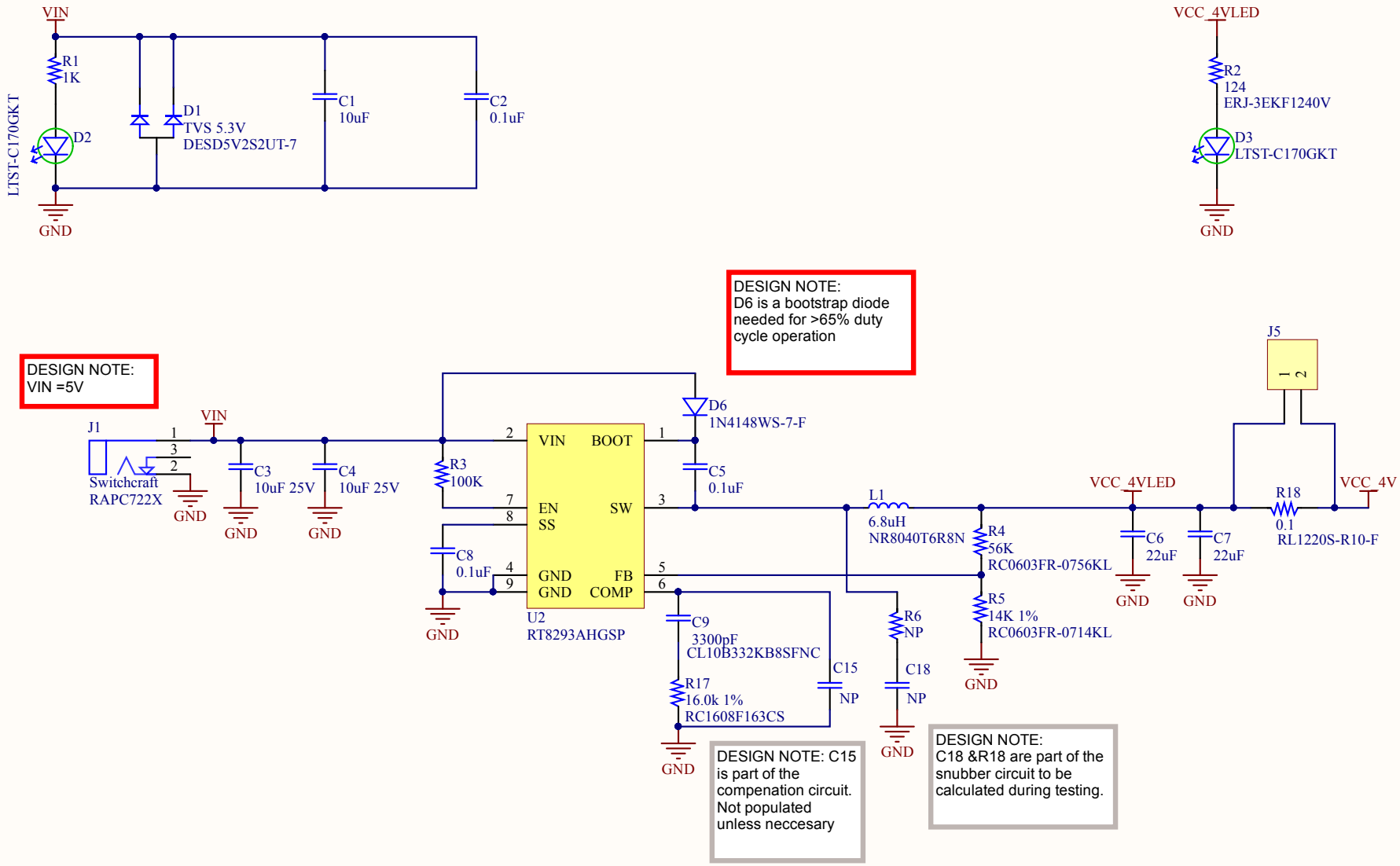

© NimbeLink Corp. 2016. All rights reserved.

Title:	Renesas RL78-G14 PMOD Adaptor		
Document Number:	20016	Revision	
Date:	8/6/2014	Sheet: 3 of 4	

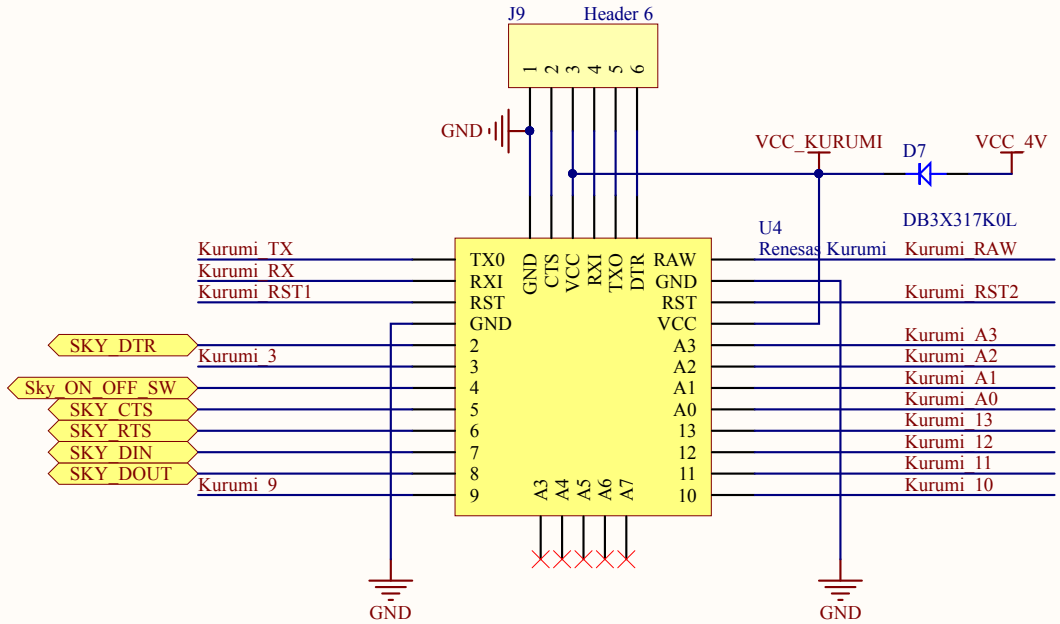

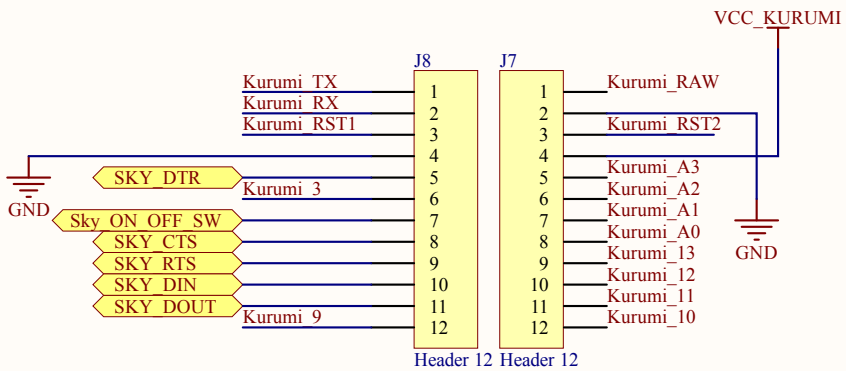

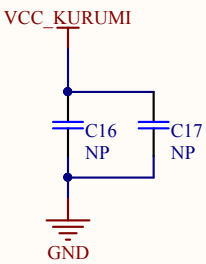

© NimbeLink Corp. 2016. All rights reserved.

Title:	Renesas RL78-G14 PMOD Adaptor		
Document Number:	20016	Revision	
Date:	8/6/2014	Sheet: 4 of 4	