THIS DRAWING IS UNPUBLISHED. RELEASED FOR PUBLICATION FEB ,2004.
© COPYRIGHT 2004 By – ALL RIGHTS RESERVED.

LOC	DIST
E	B

REVISIONS

P	LTR	DESCRIPTION	DATE	DWN	APVD
	E	REVISED PER ECO-12-010787	11JUN12	TT	MT
	E1	REVISED PER ECR-17-005149	11APR17	BW	RS

NOTES

1. TRAY PACK: 50PCS/TRAY, 1000PCS/OUTER BOX
2. SINGLE PACK: 1PC/ONE BAG, 100 BAGS/ONE INNER BOX, 10 INNER BOXES/ONE OUTER BOX
3. Au PLATING
4. Ni PLATING
5. FOR TECHNICAL DATA REFER TO YOUR LOCAL TE CONNECTIVITY SALES OFFICE
6. ALL DIMENSIONS ARE NOMINAL FOR REFERENCE ONLY UNLESS OTHERWISE STATED

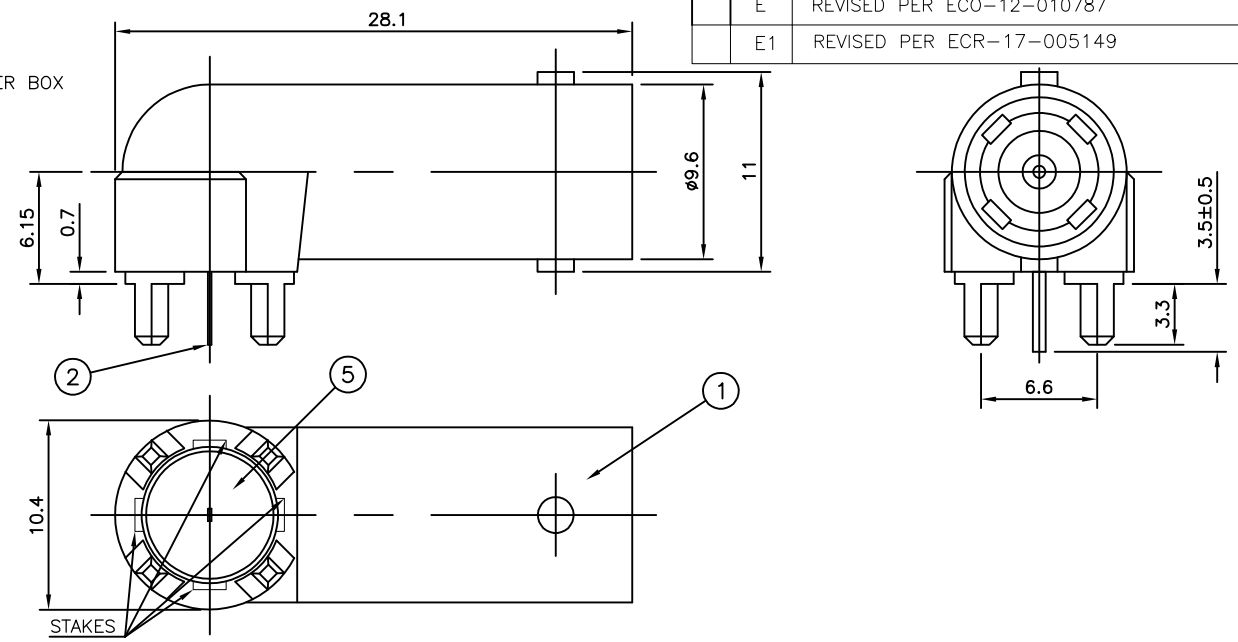

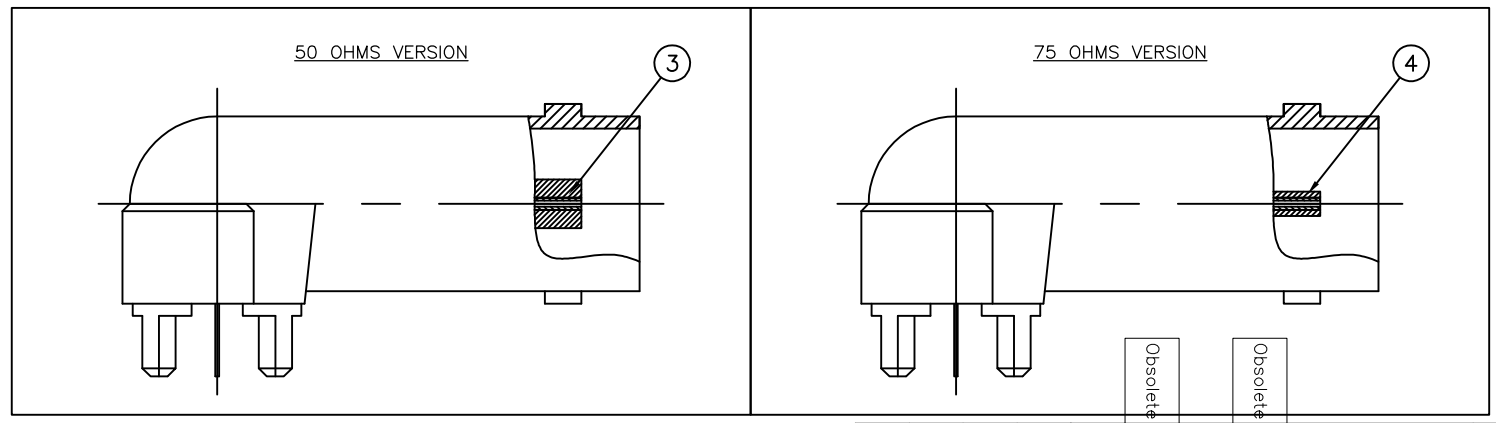

RECOMMENDED PCB LAYOUT WITH MOUNTING POSTS

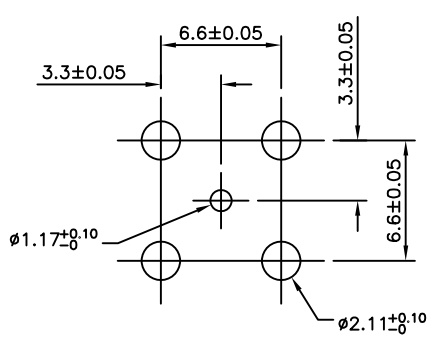

					Obsolete		Obsolete			
				1	1	1	1	PTFE	INSULATOR	5
				1	1	–	–	TPX	INSULATOR	4
				–	–	1	1	TPX	INSULATOR	3
				1	1	1	1	PHOS BRONZE 3	CONTACT	2
				1	1	1	1	ZINC ALLOY 4	BODY	1
				5--3	5--2	5--1	5--0	MATERIAL	DESCRIPTION	ITEM
				1	2	2	1			
QUANTITY PER ASSY								PARTS LIST		

THIS DRAWING IS A CONTROLLED DOCUMENT.

DIMENSIONS: mm

TOLERANCES UNLESS OTHERWISE SPECIFIED:

0 PLC	± 0.5
1 PLC	± 0.3
2 PLC	± 0.2
3 PLC	± –
4 PLC	± –
ANGLES	± –

MATERIAL: SEE TABLE

FINISH: SEE TABLE

DWN	RITA ZUO	10 Mar 09
CHK	ANSON MA	10 Mar 09
APVD	BOB ZHAO	10 Mar 09
PRODUCT SPEC	108-112000	
APPLICATION SPEC	–	
WEIGHT	0	

TE Connectivity

NAME: BNC LOW PROFILE ELBOW SOCKET – –

SIZE	CAGE CODE	DRAWING NO	RESTRICTED TO
A3	00779	C-1634513	–

CUSTOMER DRAWING | SCALE NTS | SHEET 1 OF 1 | REV E1

1470-19 (3/11)