THIS COPY IS PROVIDED ON A RESTRICTED BASIS AND IS NOT TO BE USED IN ANY WAY DETRIMENTAL TO THE INTERESTS OF PANDUIT CORP.

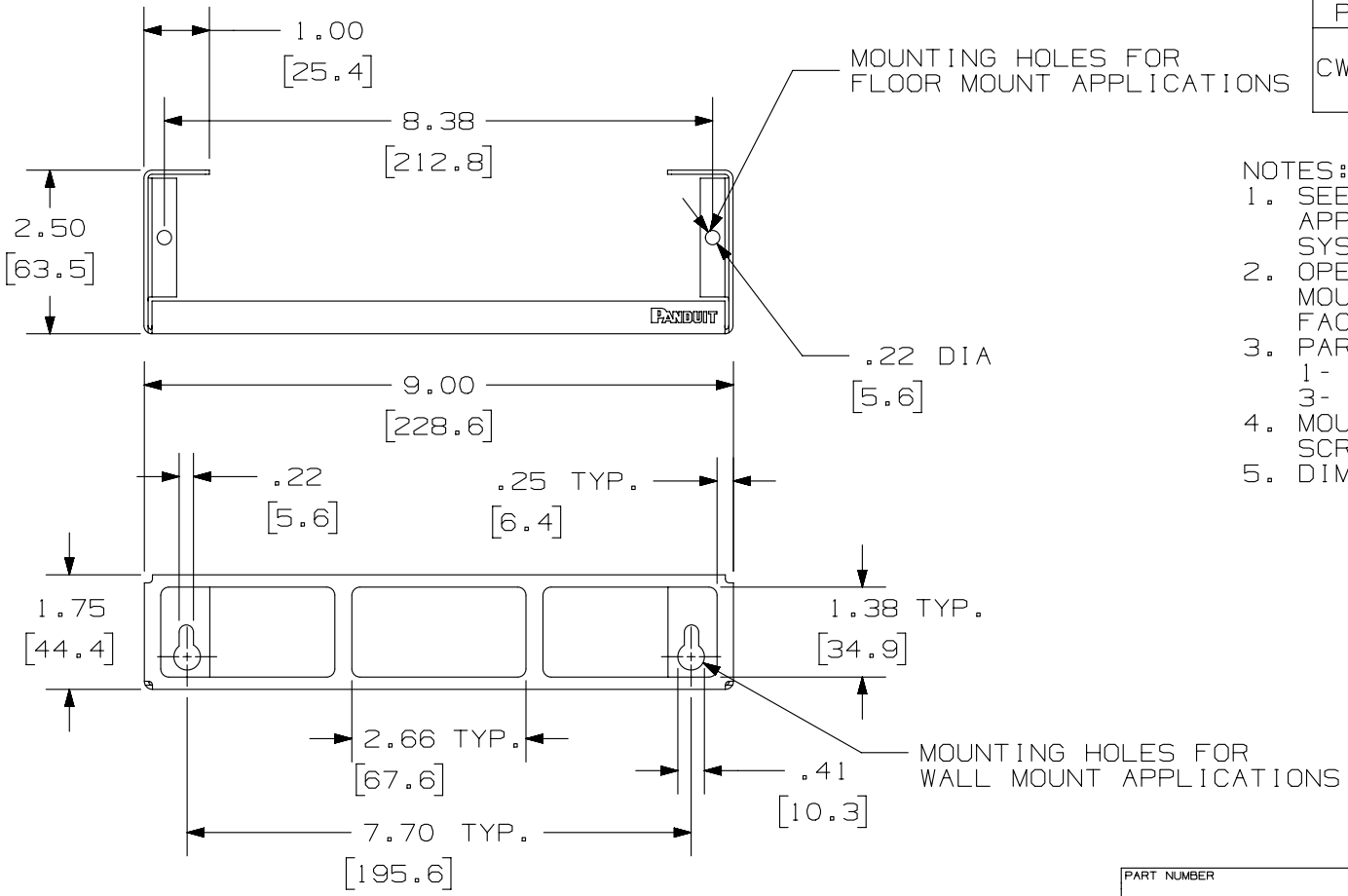

PANDUIT PART NO.	WEIGHT
CWPP12WBL	.501 LB/EA (228 G/EA)

NOTES:
1. SEE CURRENT CATALOG FOR VARIOUS APPLICATIONS WITH THIS WIRING SYSTEM.
2. OPENINGS ARE INTENDED FOR SNAP-IN MOUNTING OF PANDUIT FURNITURE FACEPLATES (CFFP4BL).
3. PART INCLUDES:
   1- PATCH PANEL FRAME
   3- FURNITURE FACEPLATE (CFFP4BL)
4. MOUNT WITH (2) ROUND OR PAN-HEAD SCREWS (#10 MAX).
5. DIMENSIONS IN [ ] ARE IN METRIC.

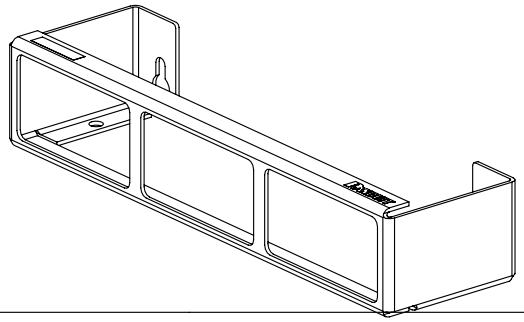

PART NUMBER: CWPP12WBL

TITLE: MINI-COM 12 PORT WALL MOUNT PATCH PANEL

CUSTOMER DRAWING

ITEM REVISION NAME: D35559BU/00

DATASET FILE NAME: D35559BU_DC/00B

UNLESS OTHERWISE SPECIFIED, DIMENSIONAL TOLERANCES ARE: IN [mm]
.X ± .XXX ± .010 [.3]
.XX ± .03[.8] ANGLES ±
THIRD ANGLE PROJECTION

MATERIAL: PANEL: C.R.S. FACEPLATE: ABS

DRAWING NUMBER: 35559-18

DRAWN BY	DATE	CHK	SCALE	SIZE
JBA	4-1-97	CEF	NONE	A

SHT 1 OF 1

REV	DATE	BY	CHK	APR	DESCRIPTION	ECN
1	5/16/14	JSP	REFR	MMR	A. REVISED DRAWING TITLE BLOCK.	35559-18
R	4-1-97	JBA	CEF	CEF	RELEASED TO PRODUCTION	35559-18

D10100DA/14