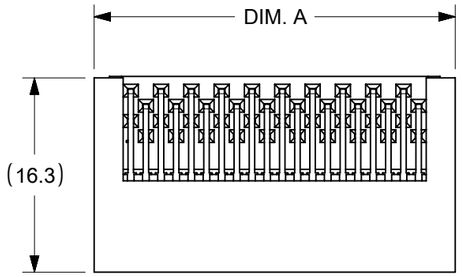

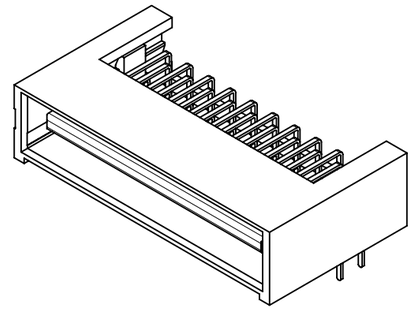

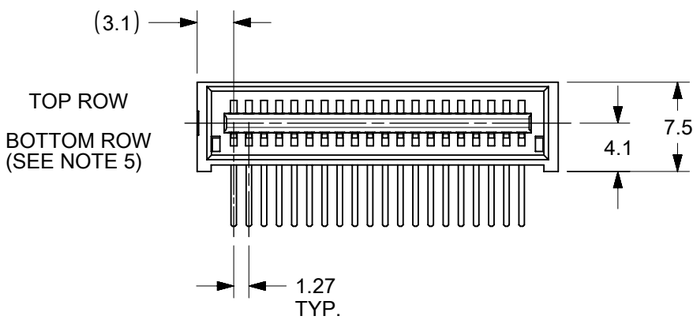

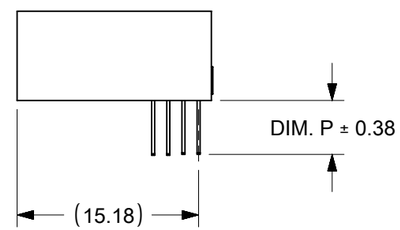

NO OF SIGNAL	MATERIAL NUMBER	DIM A	DIM P	PCB THK
12	45985-0111	12.5	4.50	3.18
16	45985-0121	15.0		
20	45985-0131	17.6		
24	45985-0141	20.1		
28	45985-0151	22.6		
32	45985-0161	25.2		
36	45985-0171	27.7		
40	45985-0181	30.3		
12	45985-0112	12.5	3.60	2.36
16	45985-0122	15.0		
20	45985-0132	17.6		
24	45985-0142	20.1		
28	45985-0152	22.6		
32	45985-0162	25.2		
36	45985-0172	27.7		
40	45985-0182	30.3		
12	45985-0113	12.5	2.90	1.57
16	45985-0123	15.0		
20	45985-0133	17.6		
24	45985-0143	20.1		
28	45985-0153	22.6		
32	45985-0163	25.2		
36	45985-0173	27.7		
40	45985-0183	30.3		

NOTES:

1. MATERIAL:
   HOUSING: GLASS FILLED LCP (LIQUID CRYSTAL POLYMER); UL94V-0; COLOR: BLACK
   TERMINALS: COPPER ALLOY
2. PLATING: 0.76 MICROMETER /(30 MICROINCH) MINIMUM SELECT GOLD
   3.81 MICROMETER / (150 MICROINCH) MINIMUM SELECT TIN, BOTH OVER
   1.27 MICROMETER / (50 MICROINCH) MINIMUM NICKEL OVERALL.
3. PRODUCT SPECIFICATION: PS-45984-001.
4. PACKAGING SPECIFICATION: PK-45984-001.
5. SEE SHEET 5 FOR CIRCUIT IDENTIFICATION.
6. PARTS ARE RoHS COMPLIANT.
7. MATES WITH 45984, 46113 SERIES RECEPTACLE.

DOCUMENT STATUS	P1	RELEASE DATE	2021/09/09 11:58:04

SYMBOLS: = 0 (5) = 0 (4) = 0 (3) = 0 (2) = 0 (1) = 0 = 0 = 0 = 0

THIS DRAWING CONTAINS INFORMATION THAT IS PROPRIETARY TO MOLEX ELECTRONIC TECHNOLOGIES, LLC AND SHOULD NOT BE USED WITHOUT WRITTEN PERMISSION

DIMENSION UNITS: mm
SCALE: 2:1

GENERAL TOLERANCES (UNLESS SPECIFIED)

	MM	INCH
4 PLACES	±	±
3 PLACES	±	±
2 PLACES	± 0.25	±
1 PLACE	±	±
0 PLACES	±	±
ANGULAR TOL	± 0.5 °	

DRAFT WHERE APPLICABLE MUST REMAIN WITHIN DIMENSIONS

CURRENT REV DESC: CIRCUIT NO. 1 AND 2 ON PCB ARE CORRECTED

EC NO: 676774
DRWN: CHETAB 2021/09/02
CHK'D: MBELLE 2021/09/07
APPR: HTHYAGARAJ 2021/09/09

INITIAL REVISION:
DRWN: BANDURA 5/1/2006
APPR: PATEL 5/5/2006

THIRD ANGLE PROJECTION | DRAWING: B-SIZE | SERIES: 45985

molex

LPH PLUG ASSEMBLY
SIGNAL CONNECTOR

PRODUCT CUSTOMER DRAWING

DOCUMENT NUMBER	DOC TYPE	DOC PART	REVISION
SD-45985-483	PSD	001	D1

MATERIAL NUMBER	CUSTOMER	SHEET NUMBER
SEE CHART	GENERAL MARKET	1 OF 5

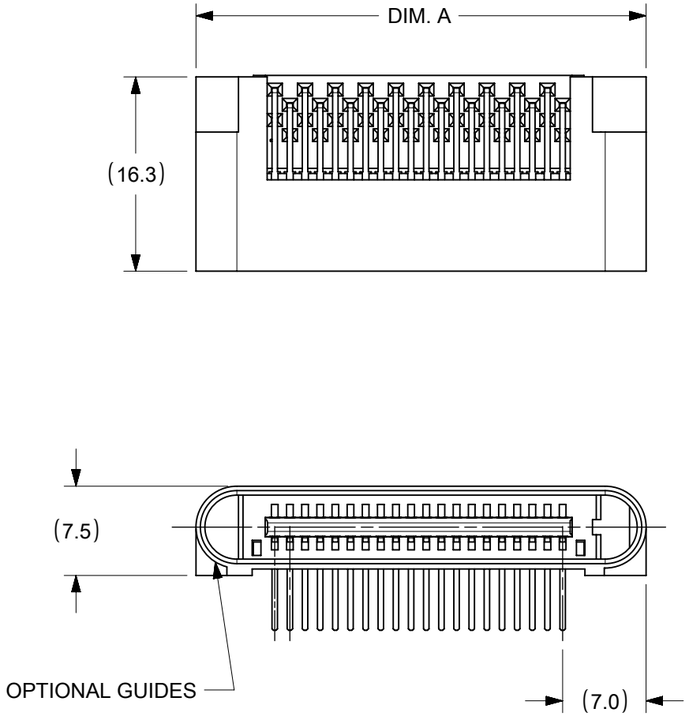

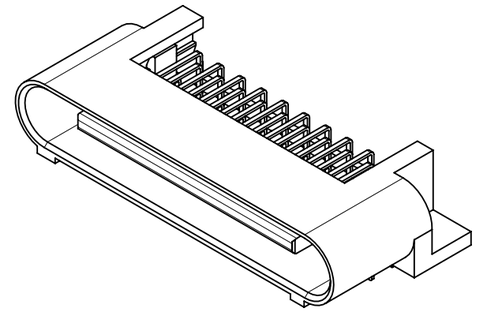

NO OF SIGNAL	MATERIAL NUMBER	DIM A	DIM P	PCB THK
12	45985-0211	19.9	4.50	3.18
16	45985-0221	22.5		
20	45985-0231	25.0		
24	45985-0241	27.6		
28	45985-0251	30.1		
32	45985-0261	32.6		
36	45985-0271	35.2		
40	45985-0281	37.7		
12	45985-0212	19.9	3.60	2.36
16	45985-0222	22.5		
20	45985-0232	25.0		
24	45985-0242	27.6		
28	45985-0252	30.1		
32	45985-0262	32.6		
36	45985-0272	35.2		
40	45985-0282	37.7		
12	45985-0213	19.9	2.90	1.57
16	45985-0223	22.5		
20	45985-0233	25.0		
24	45985-0243	27.6		
28	45985-0253	30.1		
32	45985-0263	32.6		
36	45985-0273	35.2		
40	45985-0283	37.7		

SYMBOLS: = 0 (A) = 0 (B) = 0 (D) = 0 (S) = 0 ▼ = 0 (C) = 0 ☒ = 0 ■ = 0 (V) = 0

THIS DRAWING CONTAINS INFORMATION THAT IS PROPRIETARY TO MOLEX ELECTRONIC TECHNOLOGIES, LLC AND SHOULD NOT BE USED WITHOUT WRITTEN PERMISSION

DIMENSION UNITS: mm
SCALE: 2:1

GENERAL TOLERANCES (UNLESS SPECIFIED)

	MM	INCH
4 PLACES	±	±
3 PLACES	±	±
2 PLACES	± 0.25	±
1 PLACE	±	±
0 PLACES	±	±
ANGULAR TOL	± 0.5 °	

DRAFT WHERE APPLICABLE MUST REMAIN WITHIN DIMENSIONS

CURRENT REV DESC: CIRCUIT NO. 1 AND 2 ON PCB ARE CORRECTED

EC NO: 676774
DRWN: CHETAB 2021/09/02
CHK'D: MBELLE 2021/09/07
APPR: HTHYAGARAJ 2021/09/09

INITIAL REVISION:
DRWN: BANDURA 5/1/2006
APPR: PATEL 5/5/2006

THIRD ANGLE PROJECTION | DRAWING: B-SIZE | SERIES: 45985

molex

LPH PLUG ASSEMBLY
SIGNAL CONNECTOR

PRODUCT CUSTOMER DRAWING

DOCUMENT NUMBER	DOC TYPE	DOC PART	REVISION
SD-45985-483	PSD	001	D1

MATERIAL NUMBER	CUSTOMER	SHEET NUMBER
SEE CHART	GENERAL MARKET	2 OF 5

DOCUMENT STATUS	P1	RELEASE DATE	2021/09/09 11:58:04

FORMAT: Eng-lega-prod-B
REVISION: D
DATE: 2018/01/18

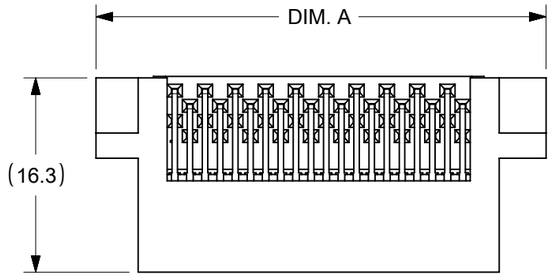

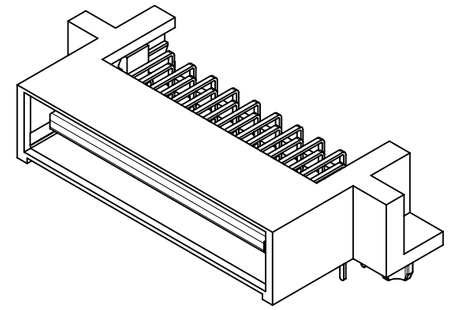

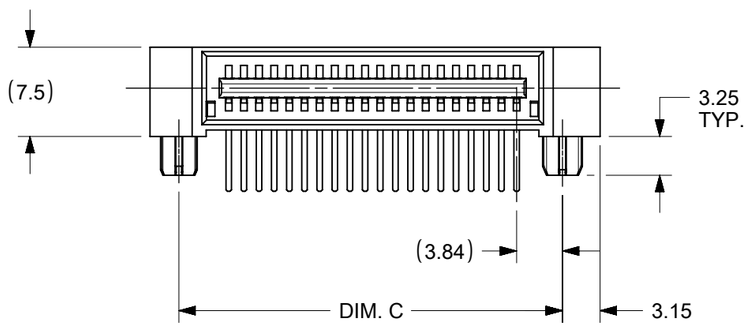

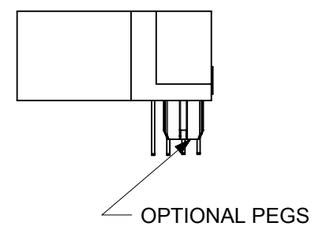

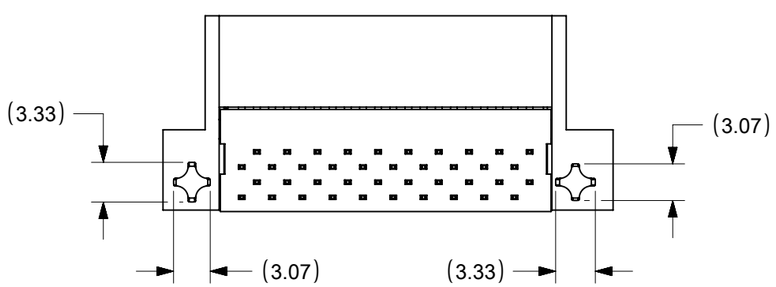

NO OF SIGNAL	MATERIAL NUMBER	DIM A	DIM C	DIM P	PCB THK
12	45985-0311	19.9	14.37	4.50	3.18
16	45985-0321	22.5	16.91		
20	45985-0331	25.0	19.45		
24	45985-0341	27.6	21.99		
28	45985-0351	30.1	24.53		
32	45985-0361	32.6	27.07		
36	45985-0371	35.2	29.61		
40	45985-0381	37.7	32.15		
12	45985-0312	19.9	14.37	3.60	2.36
16	45985-0322	22.5	16.91		
20	45985-0332	25.0	19.45		
24	45985-0342	27.6	21.99		
28	45985-0352	30.1	24.53		
32	45985-0362	32.6	27.07		
36	45985-0372	35.2	29.61		
40	45985-0382	37.7	32.15		
12	45985-0313	19.9	14.37	2.90	1.57
16	45985-0323	22.5	16.91		
20	45985-0333	25.0	19.45		
24	45985-0343	27.6	21.99		
28	45985-0353	30.1	24.53		
32	45985-0363	32.6	27.07		
36	45985-0373	35.2	29.61		
40	45985-0383	37.7	32.15		

SYMBOLS: 5 = 0; 4 = 0; 3 = 0; 5 = 0; ▼ = 0; 2 = 0; ☒ = 0; ■ = 0; 1 = 0

THIS DRAWING CONTAINS INFORMATION THAT IS PROPRIETARY TO MOLEX ELECTRONIC TECHNOLOGIES, LLC AND SHOULD NOT BE USED WITHOUT WRITTEN PERMISSION

DIMENSION UNITS: mm
SCALE: 2:1

GENERAL TOLERANCES (UNLESS SPECIFIED)

	MM	INCH
4 PLACES	±	±
3 PLACES	±	±
2 PLACES	± 0.25	±
1 PLACE	±	±
0 PLACES	±	±
ANGULAR TOL	± 0.5 °	

DRAFT WHERE APPLICABLE MUST REMAIN WITHIN DIMENSIONS

CURRENT REV DESC: CIRCUIT NO. 1 AND 2 ON PCB ARE CORRECTED

EC NO: 676774
DRWN: CHETAB 2021/09/02
CHK'D: MBELLE 2021/09/07
APPR: HTHYAGARAJ 2021/09/09

INITIAL REVISION:
DRWN: BANDURA 5/1/2006
APPR: PATEL 5/5/2006

THIRD ANGLE PROJECTION | DRAWING: B-SIZE | SERIES: 45985

molex

LPH PLUG ASSEMBLY
SIGNAL CONNECTOR

PRODUCT CUSTOMER DRAWING

DOCUMENT NUMBER	DOC TYPE	DOC PART	REVISION
SD-45985-483	PSD	001	D1

MATERIAL NUMBER	CUSTOMER	SHEET NUMBER
SEE CHART	GENERAL MARKET	3 OF 5

DOCUMENT STATUS	P1	RELEASE DATE	2021/09/09 11:58:04

FORMAT: Eng-lega-mechanical-prod-B
REVISION: D
DATE: 2018/01/18

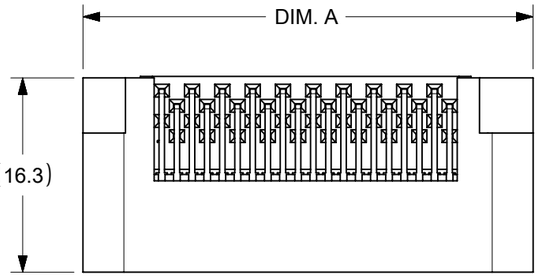

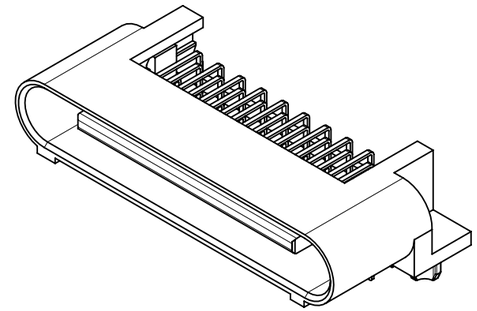

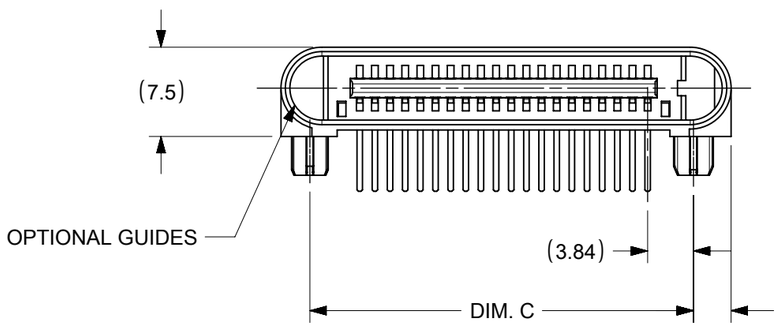

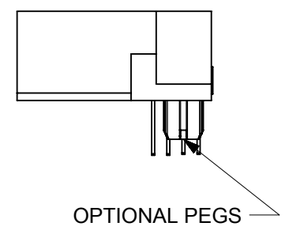

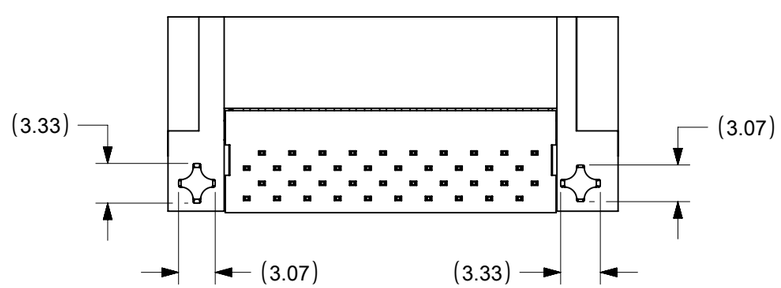

NO OF SIGNAL	MATERIAL NUMBER	DIM A	DIM C	DIM P	PCB THK
12	45985-0411	19.9	14.37	4.50	3.18
16	45985-0421	22.5	16.91		
20	45985-0431	25.0	19.45		
24	45985-0441	27.6	21.99		
28	45985-0451	30.1	24.53		
32	45985-0461	32.6	27.07		
36	45985-0471	35.2	29.61		
40	45985-0481	37.7	32.15		
12	45985-0412	19.9	14.37	3.60	2.36
16	45985-0422	22.5	16.91		
20	45985-0432	25.0	19.45		
24	45985-0442	27.6	21.99		
28	45985-0452	30.1	24.53		
32	45985-0462	32.6	27.07		
36	45985-0472	35.2	29.61		
40	45985-0482	37.7	32.15		
12	45985-0413	19.9	14.37	2.90	1.57
16	45985-0423	22.5	16.91		
20	45985-0433	25.0	19.45		
24	45985-0443	27.6	21.99		
28	45985-0453	30.1	24.53		
32	45985-0463	32.6	27.07		
36	45985-0473	35.2	29.61		
40	45985-0483	37.7	32.15		

SYMBOLS: F = 0, E = 0, D = 0, S = 0, ▼ = 0, C = 0, ☒ = 0, ■ = 0, V = 0

THIS DRAWING CONTAINS INFORMATION THAT IS PROPRIETARY TO MOLEX ELECTRONIC TECHNOLOGIES, LLC AND SHOULD NOT BE USED WITHOUT WRITTEN PERMISSION

DIMENSION UNITS: mm
SCALE: 2:1

GENERAL TOLERANCES (UNLESS SPECIFIED)

	MM	INCH
4 PLACES	±	±
3 PLACES	±	±
2 PLACES	± 0.25	±
1 PLACE	±	±
0 PLACES	±	±
ANGULAR TOL	± 0.5 °	

DRAFT WHERE APPLICABLE MUST REMAIN WITHIN DIMENSIONS

CURRENT REV DESC: CIRCUIT NO. 1 AND 2 ON PCB ARE CORRECTED

EC NO: 676774
DRWN: CHETAB 2021/09/02
CHK'D: MBELLE 2021/09/07
APPR: HTHYAGARAJ 2021/09/09

INITIAL REVISION:
DRWN: BANDURA 5/1/2006
APPR: PATEL 5/5/2006

THIRD ANGLE PROJECTION | DRAWING: B-SIZE | SERIES: 45985

molex

LPH PLUG ASSEMBLY
SIGNAL CONNECTOR

PRODUCT CUSTOMER DRAWING

DOCUMENT NUMBER	DOC TYPE	DOC PART	REVISION
SD-45985-483	PSD	001	D1

MATERIAL NUMBER	CUSTOMER	SHEET NUMBER
SEE CHART	GENERAL MARKET	4 OF 5

DOCUMENT STATUS	P1	RELEASE DATE	2021/09/09 11:58:04

FORMAT: Eng-lega-master-prod-B
REVISION: D
DATE: 2018/01/18

NO OF SIGNAL	DIM C
12	14.37
16	16.91
20	19.45
24	21.99
28	24.53
32	27.07
36	29.61
40	32.15

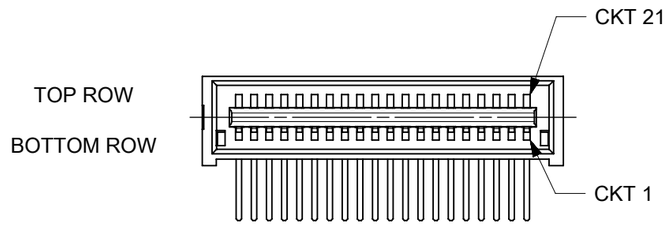

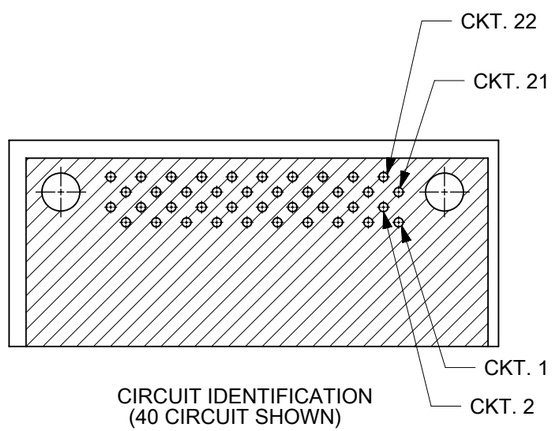

CIRCUIT IDENTIFICATION
(40 CIRCUIT SHOWN)

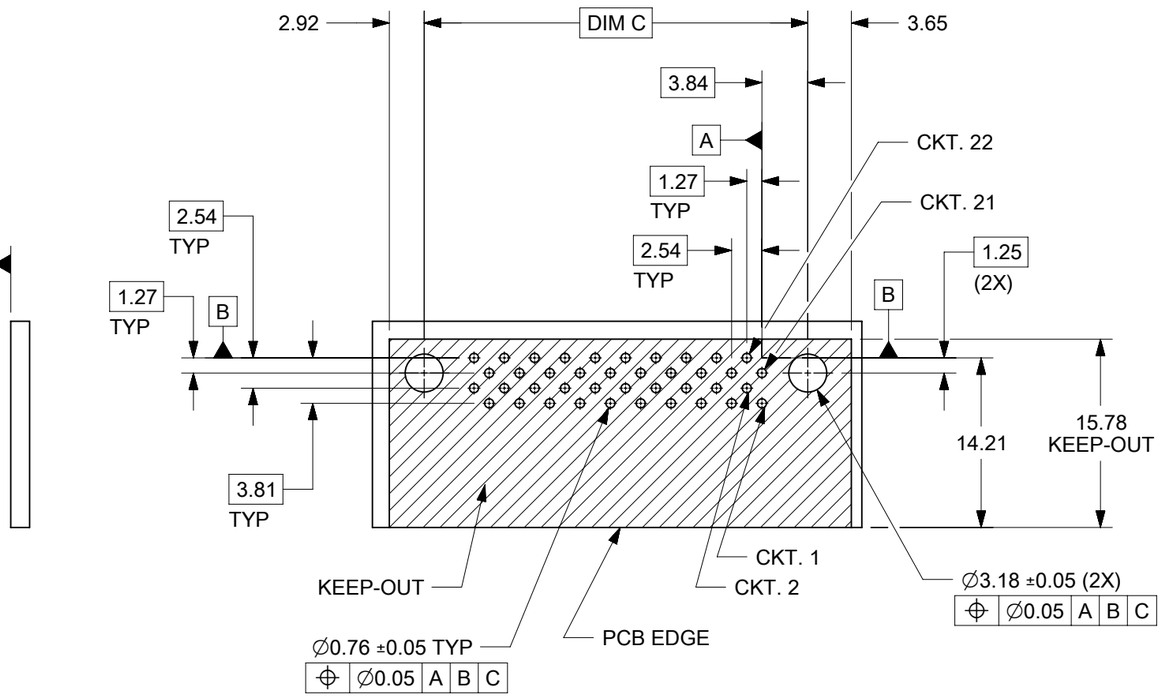

RECOMMENDED PCB LAYOUT
SHOWN FROM COMPONENT SIDE

SYMBOLS	
E A	= 0
E	= 0
E B	= 0
S	= 0
▼	= 0
C	= 0
☒	= 0
■	= 0
▽	= 0

THIS DRAWING CONTAINS INFORMATION THAT IS PROPRIETARY TO MOLEX ELECTRONIC TECHNOLOGIES, LLC AND SHOULD NOT BE USED WITHOUT WRITTEN PERMISSION

DIMENSION UNITS	SCALE
mm	2:1

GENERAL TOLERANCES (UNLESS SPECIFIED)

	MM	INCH
4 PLACES	±	±
3 PLACES	±	±
2 PLACES	± 0.25	±
1 PLACE	±	±
0 PLACES	±	±
ANGULAR TOL	± 0.5 °	

DRAFT WHERE APPLICABLE MUST REMAIN WITHIN DIMENSIONS

CURRENT REV DESC: CIRCUIT NO. 1 AND 2 ON PCB ARE CORRECTED

EC NO: 676774
DRWN: CHETAB 2021/09/02
CHK'D: MBELLE 2021/09/07
APPR: HTHYAGARAJ 2021/09/09

INITIAL REVISION:
DRWN: BANDURA 5/1/2006
APPR: PATEL 5/5/2006

THIRD ANGLE PROJECTION | DRAWING: B-SIZE | SERIES: 45985

molex

LPH PLUG ASSEMBLY
SIGNAL CONNECTOR

PRODUCT CUSTOMER DRAWING

DOCUMENT NUMBER	DOC TYPE	DOC PART	REVISION
SD-45985-483	PSD	001	D1

MATERIAL NUMBER	CUSTOMER	SHEET NUMBER
SEE CHART	GENERAL MARKET	5 OF 5

DOCUMENT STATUS	P1	RELEASE DATE	2021/09/09 11:58:04

FORMAT: Eng-lega-prod-prod-B
REVISION: D
DATE: 2018/01/18