TABLE OF CONTENTS

SHEET NO.	SHEET DESCRIPTION
1	NOTES AND BOM
2	CONFIGURATIONS
3	KEY CONFIGURATIONS
4	RECEPTACLE CONNECTOR ASSEMBLY

NOTES: VALID UNLESS OTHERWISE SPECIFIED

1. GENERAL:
a. APPLICATION SPECIFICATION SEE: 1601110001-AS
-CONTAINS: PRODUCT INTRODUCTION, PRODUCT SUMMARY, CONNECTOR ASSEMBLY, PACKAGING INFORMATION, CONNECTOR MATING, SERVICE INSTRUCTIONS, ELECTRICAL CONTINUITY CHECKING, CRIMPING, AND TROUBLESHOOTING.
-DESIGNED TO MATE WITH DEVICE OR CONNECTOR AS SPECIFIED IN THE MATING INTERFACE/CONNECTOR DRAWINGS CHART.
*DENOTES DRAWINGS THAT CAN BE ACCESED AT http://ewcap.uscarteams.org/.
-ASSEMBLY SHIPPED WITH PLR IN PRE-LOCK POSITION (SEE PLR PRE-LOCK VIEW SHEET 4).

b. PRODUCT SPECIFICATION SEE: 1600760001-PS
CONTAINS: SCOPE, PRODUCT DESCRIPTION, INTEGRAL COMPONENTS AND ACCESSORIES, APPLICABLE DOCUMENTS AND SPECIFICATIONS, RATINGS, PERFORMANCE, PACKAGING, GAUGES AND FIXTURES, AND OTHER INFORMATION
c. PACKAGING SPECIFICATION PER MOLEX DRAWING: SEE PACKAGING CHART
d. PARTS MUST BE IN COMPLIANCE TO MOLEX CHEMICAL SUBSTANCES FOR PRODUCTS AND PACKAGING SPECIFICATION: QEHS-699000-300
e. DATA MUST BE SUBMITTED UNDER THE MOLEX PART NUMBER TO IMDS (COMPANY ID#13255)

2. DESIGN - MATERIALS:
a. SEE BOM TABLE IN SD-160076-0002

3. DESIGN - GEOMETRY:
a. THE 3-D CAD DATA IS BASIC (WITHOUT TOLERANCE) AND MASTER FOR THIS PART WITH THE EXCEPTION OF UNDERLINED DIMENSIONS, DIMENTIONAL INFORMATION NOT SHOWN ON THIS DRAWING IS DEFINED BY THE DATA FILE AT ITS LATEST REVISION.
b. GEOMETRIC DIMENSIONS AND TOLERANCES PER ASME Y14.5M-2009
c. EDGES AND UNDIMENSIONED DETAILS PER ISO13715
d. CORNERS SHOWN AS SHARP TO BE R 0.2 MAX.
e. LETTERING SHALL BE 0.15 MAX RAISED IN 0.25 MAX RECESS PAD. THIS INCLUDES RECYCLING CODE, CAVITY ID, VENDOR IDENTIFICATION.
f. VISUAL DEFECTS SHALL MEET COSMETIC STANDARD PS-45499-002 (Class B).
g. LASER MARKING:
1. PART NUMBER
2. DAY OF THE YEAR
3. MACHINE NO.
4. YEAR
FOR ADDITIONAL INFORMATION REFERENCE SECTION 5 UNDER PROCEDURES IN ES-34735-008.

PACKAGING

DESCRIPTION	DRAWING NO.
10 WAY HYBRID (1.5/2.8)	PK-31300-903
8 WAY HYBRID (1.5/6.3)	PK-31300-903
9 WAY HYBRID (1.5/2.8/6.3)	PK-31300-903

MATING INTERFACE/CONNECTOR DRAWINGS

DESCRIPTION	INTERFACE DEFINITION	MOLEX INLINE
10 WAY HYBRID (1.5/2.8)	999-S-010-2-Z01	SD-160077-0001
8 WAY HYBRID (1.5/6.3)	999-S-008-2-Z01	SD-160077-0001
9 WAY HYBRID (1.5/2.8/6.3)	999-S-009-2-Z01	SD-160077-0001

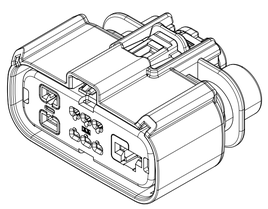

160080 SERIES

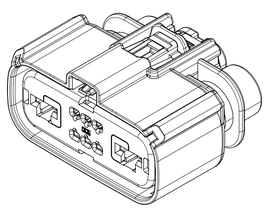

160078 SERIES

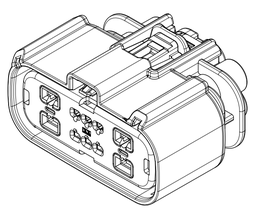

160076 SERIES

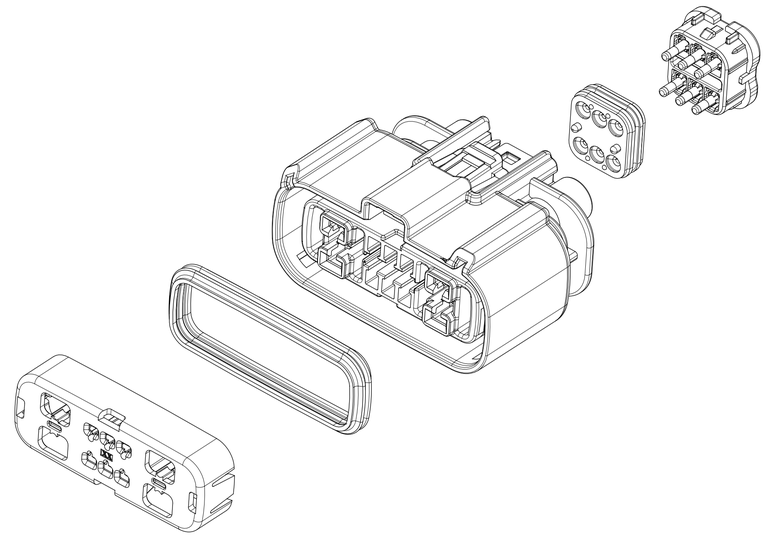

REV	REV DESCRIPTION
A8	UPDATED VIEWS IN SHEET 5
A7	ADDED INTERFACE DRAWINGS IN SHEETS 5,6,7
A6	UPDATED VIEWS & GENERAL NOTES
A5	UPDATED DRAWING ALONG WITH NEW MODELS
A4	MIGRATED DOCUMENT FROM HISTORY
A3	UPDATE KEYING STRATEGY
A2	UPDATE DIMENSION 3
A1	UPDATE PACKAGING DRAWINGS
A	RELEASE OK TO TOOL

INSPECTION NUMBER LOG
LAST NUMBER: 5
ADDED:
REMOVED:

THIS DRAWING CONTAINS INFORMATION THAT IS PROPRIETARY TO MOLEX ELECTRONIC TECHNOLOGIES, LLC AND SHOULD NOT BE USED WITHOUT WRITTEN PERMISSION

SYMBOLS	DIMENSION UNITS	SCALE
= 0	mm	2:1

GENERAL TOLERANCES (UNLESS SPECIFIED)

ANGULAR TOL	±	3.0 °
4 PLACES	±	
3 PLACES	±	
2 PLACES	±	0.1
1 PLACE	±	0.2
0 PLACES	±	

DRAFT WHERE APPLICABLE MUST REMAIN WITHIN DIMENSIONS

CURRENT REV DESC:

EC NO: 660404
DRWN: ATEEGULLA 2021/04/08
CHK'D: KBORUSZEWSKI 2021/04/08
APPR: KBORUSZEWSKI 2021/04/08

INITIAL REVISION:
DRWN: APROFFITT 2015/01/29
APPR: VKOSHY 2015/05/21

THIRD ANGLE PROJECTION | DRAWING: A1-SIZE | SERIES: 160076

molex

MX150 HYB RCPT DUAL ROW SEALED ASSY
DUAL ROW SEALED ASSEMBLY MAT SEAL

PRODUCT CUSTOMER DRAWING

DOCUMENT NUMBER	DOC TYPE	DOC PART	REVISION
SD-160076-0001	PSD	001	A8

MATERIAL NUMBER	CUSTOMER	SHEET NUMBER
SEE NOTE 2a.	GENERAL MARKET	1 OF 7

DOCUMENT STATUS	P1	RELEASE DATE	2021/04/08 19:48:42

SHEET DESCRIPTION
CONFIGURATIONS

	160076 SERIES	160078 SERIES	160080 SERIES
STANDARD	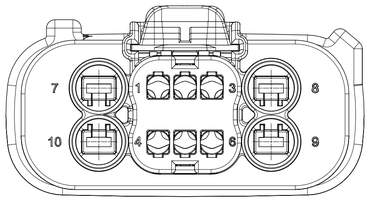	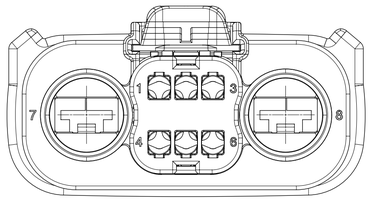	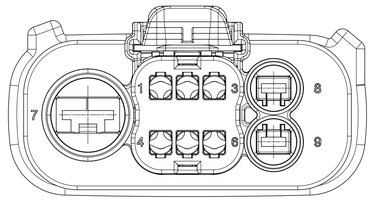
WITH BLOCKED CAVITIES	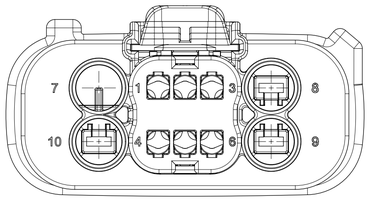	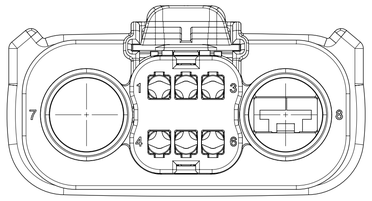	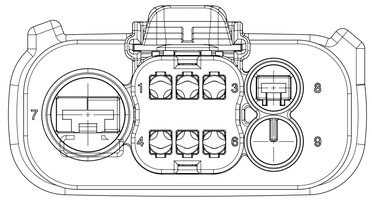
WITH CLIPSLOT	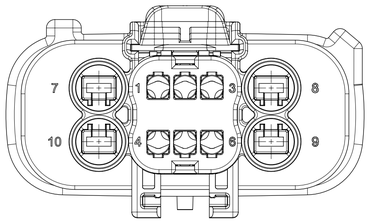	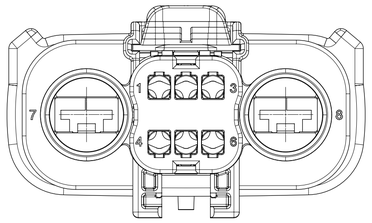	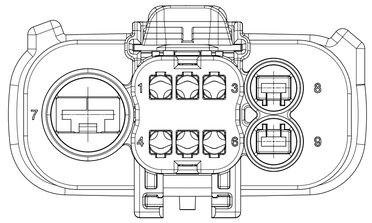

SYMBOLS
= 0
= 0
= 0
= 0
= 0
= 0
= 0
= 0
= 0

THIS DRAWING CONTAINS INFORMATION THAT IS PROPRIETARY TO MOLEX ELECTRONIC TECHNOLOGIES, LLC AND SHOULD NOT BE USED WITHOUT WRITTEN PERMISSION

DIMENSION UNITS	SCALE
mm	2.5:1

GENERAL TOLERANCES (UNLESS SPECIFIED)

ANGULAR TOL	±	3.0 °
4 PLACES	±	
3 PLACES	±	
2 PLACES	±	0.1
1 PLACE	±	0.2
0 PLACES	±	

DRAFT WHERE APPLICABLE MUST REMAIN WITHIN DIMENSIONS

CURRENT REV DESC:

EC NO: 660404
DRWN: ATEEGULLA 2021/04/08
CHK'D: KBORUSZEWSKI 2021/04/08
APPR: KBORUSZEWSKI 2021/04/08

INITIAL REVISION:
DRWN: APROFFITT 2015/01/29
APPR: VKOSHY 2015/05/21

molex

MX150 HYB RCPT DUAL ROW SEALED ASSY
DUAL ROW SEALED ASSEMBLY MAT SEAL

PRODUCT CUSTOMER DRAWING

DOCUMENT NUMBER	DOC TYPE	DOC PART	REVISION
SD-160076-0001	PSD	001	A8

THIRD ANGLE PROJECTION	DRAWING	SERIES	MATERIAL NUMBER	CUSTOMER	SHEET NUMBER
	A1-SIZE	160076	SEE NOTE 2a.	GENERAL MARKET	2 OF 7

DOCUMENT STATUS	P1	RELEASE DATE	2021/04/08 19:48:42

FORMAT: master-tb-print-A1
DWG TYPE: assy
DWG SIZE: 841 x 1189
DATE: 2018/01/16

SHEET DESCRIPTION
KEY CONFIGURATIONS (ALL)

CHARTED DIMENSIONS

DESCRIPTION	DIMENSIONS	
	L	M
10 WAY HYBRID (1.5/2.8)	15.82	13.82
8 WAY HYBRID (1.5/6.3)	15.82	13.82
9 WAY HYBRID (1.5/2.8/6.3)	15.82	13.82

8 WAY

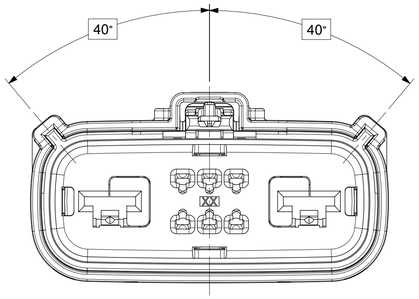

KEY A

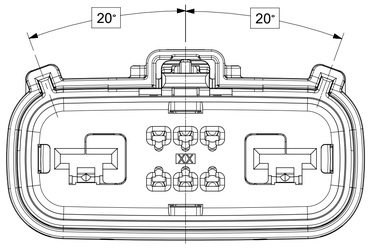

KEY B

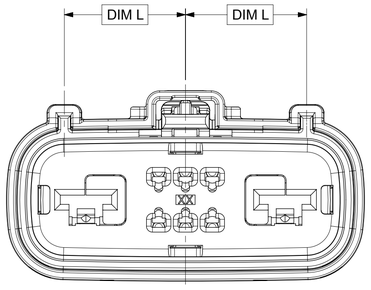

KEY C

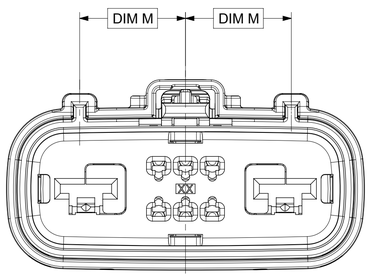

KEY D

9 WAY

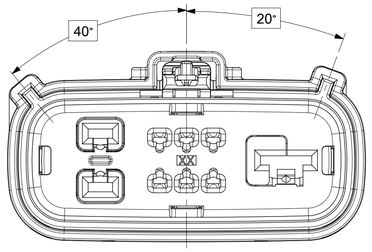

KEY A

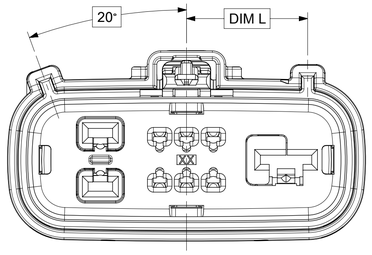

KEY B

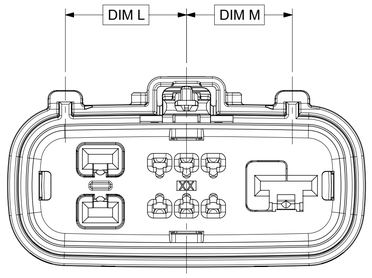

KEY C

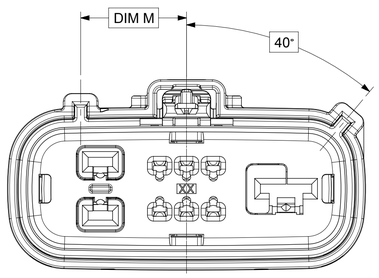

KEY D

10 WAY

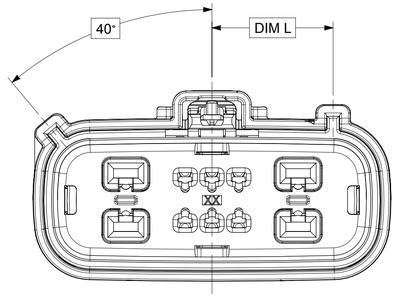

KEY A

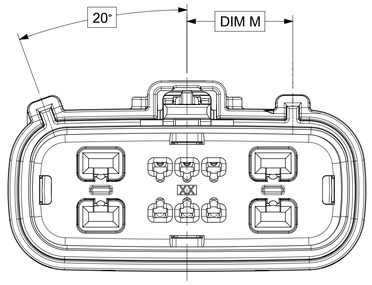

KEY B

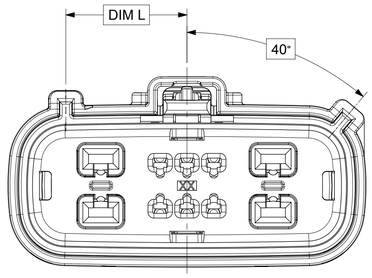

KEY C

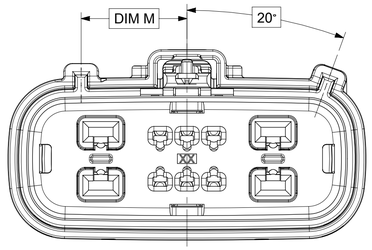

KEY D

DOCUMENT STATUS	P1	RELEASE DATE	2021/04/08 19:48:42

SYMBOLS	
A = 0	
C = 0	
F = 0	
S = 0	
= 0	
C = 0	
= 0	
= 0	
= 0	

THIS DRAWING CONTAINS INFORMATION THAT IS PROPRIETARY TO MOLEX ELECTRONIC TECHNOLOGIES, LLC AND SHOULD NOT BE USED WITHOUT WRITTEN PERMISSION

DIMENSION UNITS	SCALE
mm	2.5:1

GENERAL TOLERANCES (UNLESS SPECIFIED)

ANGULAR TOL	±	3.0 °
4 PLACES	±	
3 PLACES	±	
2 PLACES	±	0.1
1 PLACE	±	0.2
0 PLACES	±	

DRAFT WHERE APPLICABLE MUST REMAIN WITHIN DIMENSIONS

CURRENT REV DESC:

EC NO: 660404
DRWN: ATEEGULLA 2021/04/08
CHK'D: KBORUSZEWSKI 2021/04/08
APPR: KBORUSZEWSKI 2021/04/08

INITIAL REVISION:
DRWN: APROFFITT 2015/01/29
APPR: VKOSHY 2015/05/21

THIRD ANGLE PROJECTION

DRAWING	SERIES
A1-SIZE	160076

molex

MX150 HYB RCPT DUAL ROW SEALED ASSY
DUAL ROW SEALED ASSEMBLY MAT SEAL

PRODUCT CUSTOMER DRAWING

DOCUMENT NUMBER	DOC TYPE	DOC PART	REVISION
SD-160076-0001	PSD	001	A8

MATERIAL NUMBER	CUSTOMER	SHEET NUMBER
SEE NOTE 2a.	GENERAL MARKET	3 OF 7

SHEET DESCRIPTION
RECEPTACLE CONNECTOR ASSEMBLY

CHARTED DIMENSIONS

DESCRIPTION	DIMENSIONS									
	A	B	C	D	E	F	G	H	J	K
10 WAY HYBRID (1.5/2.8)	25.56	3.50	47.48	11.25	N/A	50.00	7	8	9	10
8 WAY HYBRID (1.5/6.3)	25.56	3.50	47.48	N/A	13.00	50.00	7	8	N/A	N/A
9 WAY HYBRID (1.5/2.8/6.3)	25.56	3.50	47.48	11.25	13.00	50.00	7	8	9	N/A
10 WAY HYBRID (1.5/2.8) W/ CLIPSLOT	28.38	3.50	47.48	11.25	N/A	50.00	7	8	9	10
8 WAY HYBRID (1.5/6.3) W/ CLIPSLOT	28.38	3.50	47.48	N/A	13.00	50.00	7	8	N/A	N/A
9 WAY HYBRID (1.5/2.8/6.3) W/ CLIPSLOT	28.38	3.50	47.48	11.25	13.00	50.00	7	8	9	N/A

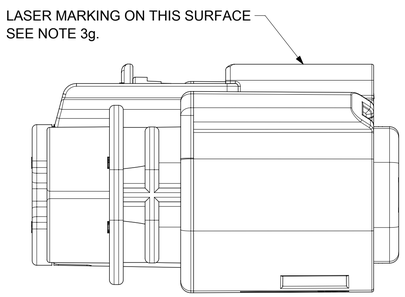

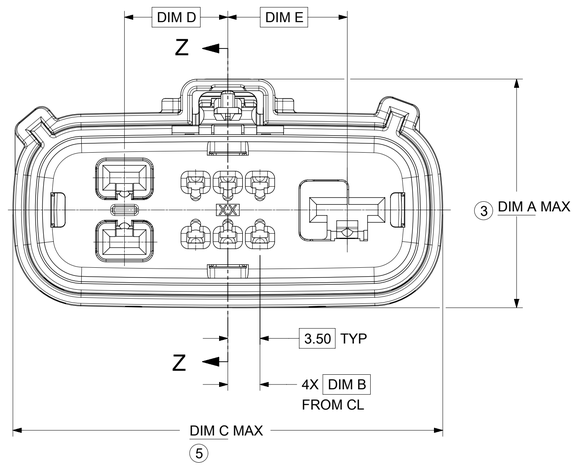

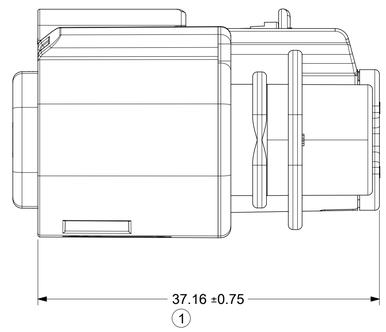

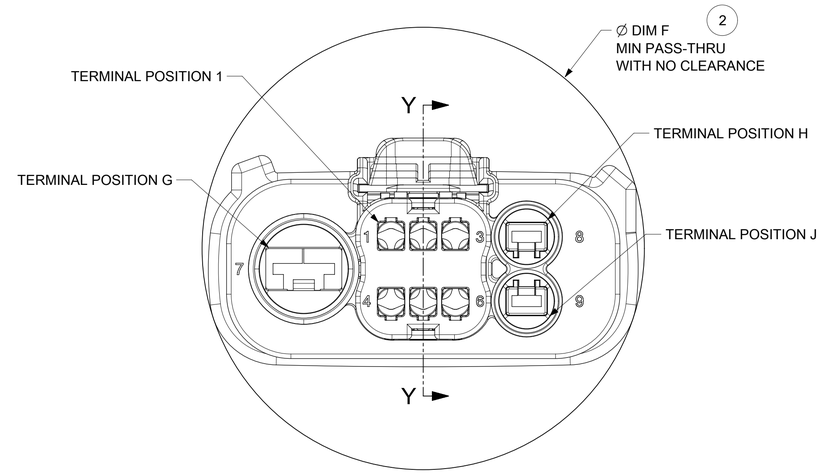

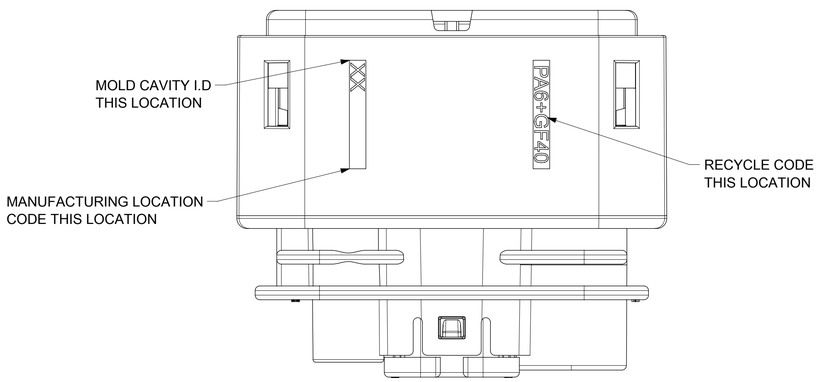

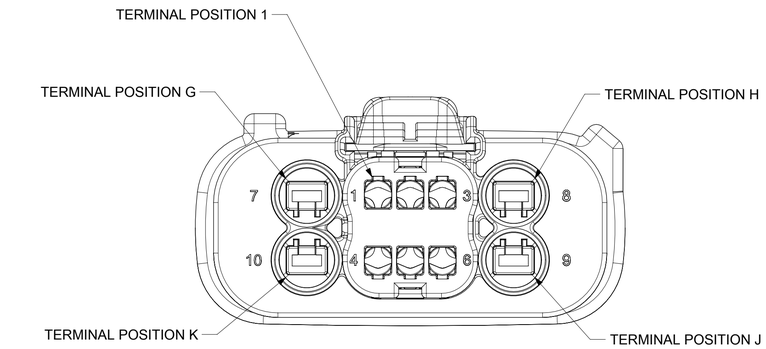

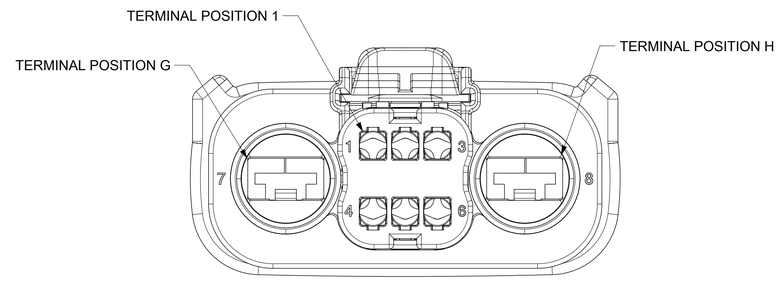

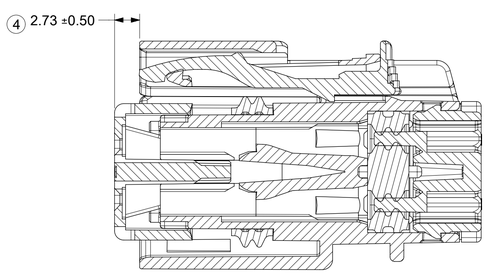

PRIMARY LOCK REINFORCEMENT (PLR) SHOWN
IN PRE-STAGED POSITION

SECTION Z-Z

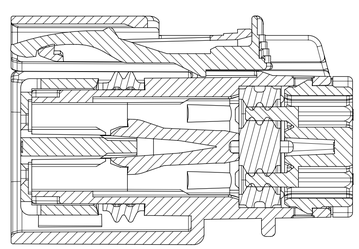

PRIMARY LOCK REINFORCEMENT (PLR) SHOWN
IN FINAL-STAGED POSITION

SECTION Y-Y

SYMBOLS	
A = 0	
C = 0	
F = 0	
S = 0	
= 0	
= 0	
= 0	
= 0	
= 0	
= 0	

THIS DRAWING CONTAINS INFORMATION THAT IS PROPRIETARY TO MOLEX ELECTRONIC TECHNOLOGIES, LLC AND SHOULD NOT BE USED WITHOUT WRITTEN PERMISSION

DIMENSION UNITS	SCALE
mm	3:1

GENERAL TOLERANCES (UNLESS SPECIFIED)

ANGULAR TOL	±	3.0 °
4 PLACES	±	
3 PLACES	±	
2 PLACES	±	0.1
1 PLACE	±	0.2
0 PLACES	±	

DRAFT WHERE APPLICABLE MUST REMAIN WITHIN DIMENSIONS

CURRENT REV DESC:

EC NO: 660404
DRWN: ATEEGULLA 2021/04/08
CHK'D: KBORUSZEWSKI 2021/04/08
APPR: KBORUSZEWSKI 2021/04/08

INITIAL REVISION:
DRWN: APROFFITT 2015/01/29
APPR: VKOSHY 2015/05/21

THIRD ANGLE PROJECTION | DRAWING: A1-SIZE | SERIES: 160076

molex

MX150 HYB RCPT DUAL ROW SEALED ASSY
DUAL ROW SEALED ASSEMBLY MAT SEAL

PRODUCT CUSTOMER DRAWING

DOCUMENT NUMBER	DOC TYPE	DOC PART	REVISION
SD-160076-0001	PSD	001	A8

MATERIAL NUMBER	CUSTOMER	SHEET NUMBER
SEE NOTE 2a.	GENERAL MARKET	4 OF 7

DOCUMENT STATUS	P1	RELEASE DATE	2021/04/08 19:48:42

CONTENT: creation-file-product-A-
SCHEMA: 3d
DATE: 2018/01/18

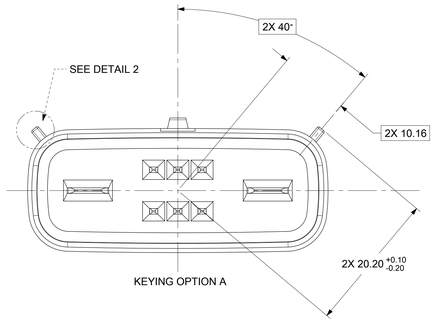

KEYING OPTION A

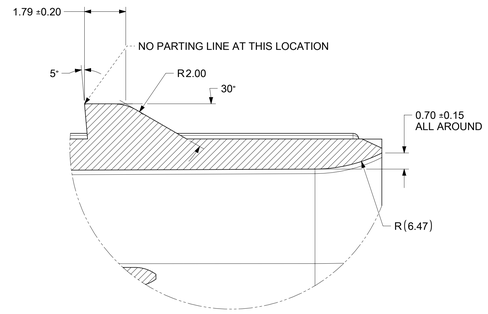

DETAIL 3
SCALE 10:1

IF HEADER IS RECESSED INTO POCKET. THESE DIMENSIONS REPRESENT THE MINIMUM CLEARANCE REQUIRED FOR THE MATING SHROUD.

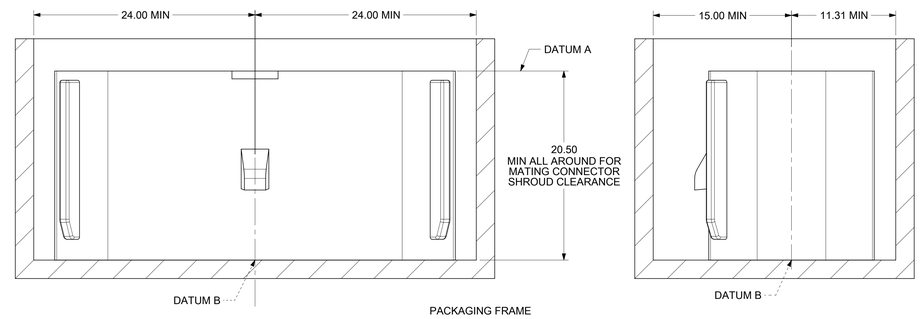

PACKAGING FRAME

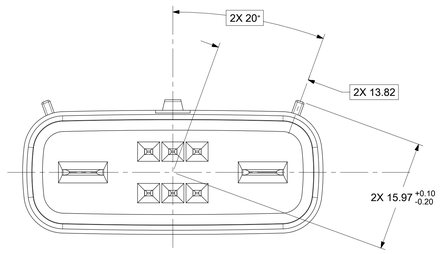

KEYING OPTION B

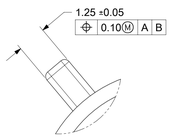

DETAIL 2
SCALE 10:1

SEE KEYING OPTION VIEWS
FOR POSITIONS

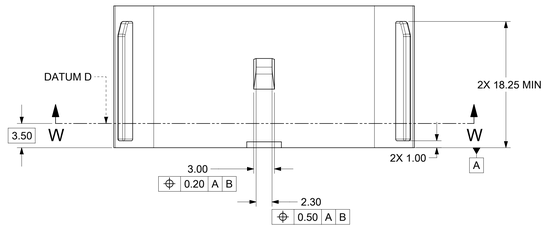

NOTICE

THIS DRAWING OR PORTIONS OF IT, ARE CONTROLLED BY THE ELECTRICAL WIRING COMPONENTS APPLICATION PARTNERSHIP (EWCAP), A SUBGROUP OF THE UNITED STATES CONSORTIUM FOR AUTOMOTIVE RESEARCH LLC (USCAR). USCAR IS A PARTNERSHIP BETWEEN CHRYSLER GROUP LLC, FORD MOTOR COMPANY, AND GENERAL MOTORS CORPORATION ANY CHANGE TO A EWCAP CONTROLLED PORTION OF THIS DRAWING, INCLUDING A "RECORD CHANGE" MUST BE APPROVED. IN WRITING, BY THE RESPONSIBLE EWCAP MEMBER FROM EACH USCAR COMPANY. EACH EWCAP MEMBER AUTHORIZED TO SIGN FOR HIS OR HER COMPANY IS RESPONSIBLE FOR OBTAINING ALL NECESSARY APPROVALS WITHIN THAT COMPANY PRIOR TO SIGNING FOR APPROVAL OF THE CHANGE. EWCAP EXPRESSLY PROHIBITS ANY PARTY FROM CHANGING EITHER ANY EWCAP CONTROLLED PORTION OF THIS DRAWING OR ANY ASSOCIATED TOOLING BEFORE RECEIVING AN APPROVAL SIGNED BY AN AUTHORIZED REPRESENTATIVE FROM EACH EWCAP PARTNER. REFERENCE TO THE SIGNED APPROVAL FORM MUST BE ENTERD IN THIS DRAWING'S CONTROL COLUMN.

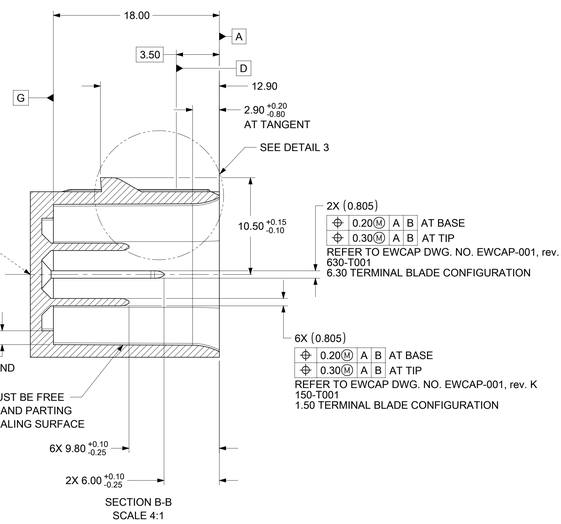

SECTION B-B
SCALE 4:1

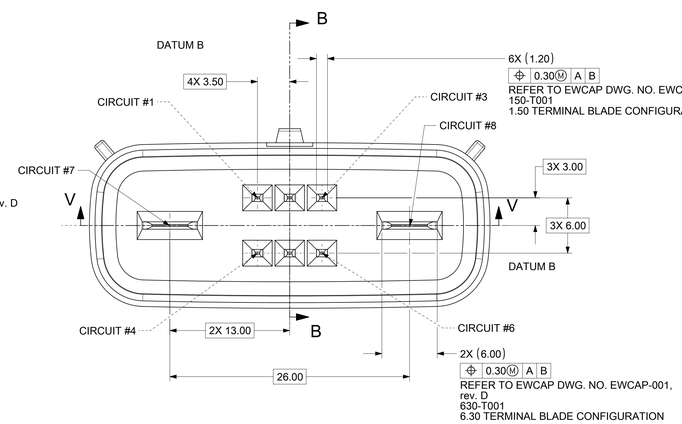

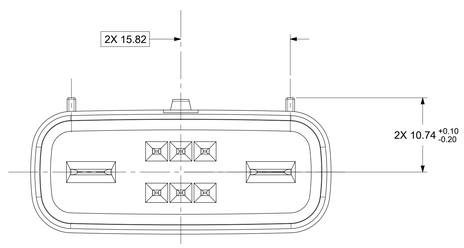

KEYING OPTION C

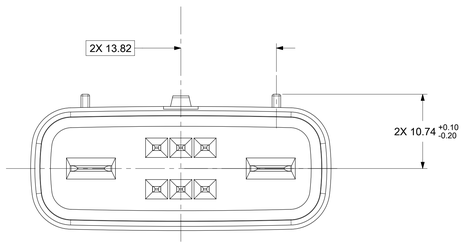

KEYING OPTION D

NOTES: UNLESS OTHERWISE SPECIFIED

1. ALL DIMENSIONS SHOWN IN MILLIMETERS.
2. DIMENSIONING AND TOLERANCING PER ASME Y14.5M-1994
3. 0.25 RADII ON ALL CORNERS SHOWN SHARP.
4. UNSPECIFIED RADII: 0.25 EXCEPT AS NOTED.
5. STANDARD COLORS FOR POLARIZATION (SEE CHART). DEVIATION REQUIRES APPROVAL OF AUTHORIZED PERSON.
6. REFER TO "SAE/USCAR 12 CONNECTOR GUIDELINES" FOR ADDITIONAL REQUIREMENTS.
7. EXCEPT WHERE NOTED, DRAFT ON OUTSIDE SURFACES IS PERMISSIBLE WITHIN TOLERANCE.
8. SYMBOL INDICATES DRAFT DIRECTION.
9. FOR TERMINAL MATERIAL, DIMENSIONAL, AND COATING REQUIREMENTS AND ANY BLADE TERMINAL DESIGN INFORMATION NOT SHOWN ON THIS DRAWING SEE EWCAP DRW. NO. EWCAP-001, rev. K.
   1.5 PLATING:
   UNDERPLATING: ELECTRO-DEPOSITED NICKEL SULFAMATE 0.76-2.00 MICROMETERS
   TOP LAYER: ELECTRO-DEPOSITED MATTE TIN 1.00-2.50 MICROMETERS
   6.3 PLATING:
   UNDERPLATING: ELECTRO-DEPOSITED NICKEL 1.25-2.25 MICROMETERS
   TOP LAYER: ELECTRO-DEPOSITED MATTE TIN 1.00-2.50 MICROMETERS
10. A FULL SHROUD ON THE MATING CONNECTOR IS REQUIRED TO INSURE THAT THE CONNECTOR-HEADER POLARIZATION FEATURES (OPTIONS A THRU D) WILL FUNCTION. THE FULL SHROUD ALSO PREVENTS SCOOP DAMAGE TO THE HEADER PINS. REFER TO "SAE/USCAR-12 CONNECTOR DESIGN GUIDE LINES" FOR ADDITIONAL INFORMATION.
11. REFER TO USCAR/EWCAP PART LIST AS FOUND ON WEBSITE http://www.uscarteams.org
12. THIS IS A 100% CAD GENERATED PART. THE CAD MATHEMATICAL DATA IS THE MASTER FOR THIS PART. FOR DIMENSIONAL OR ANY INFORMATION NOT SHOWN ON THIS DRAWING, ANALYZE THE CAD MODEL.

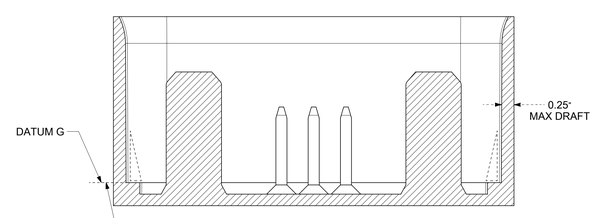

SECTION V-V
SCALE 4:1

CONSTRUCTION BELOW THIS SURFACE IS NOT CONTROLED BY EWCAP. NO PLASTIC FEATURES MAY EXTEND ABOVE THIS SURFACE

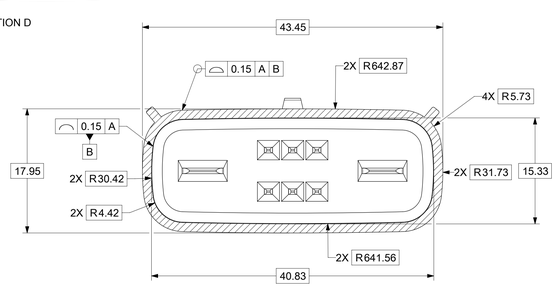

SECTION W-W
AT DATUM D
SCALE 3:1

D	STONE GRAY
C	DARK GRAY
B	LIGHT GRAY
A	BLACK
OPTION	MATING CONNECTOR COLOR

DOCUMENT STATUS	P1	RELEASE DATE	2021/03/03 23:36:12

SYMBOLS	
FA	= 0
FC	= 0
FB	= 0
S	= 0
	= 0
C	= 0
	= 0
	= 0
C	= 0

THIS DRAWING CONTAINS INFORMATION THAT IS PROPRIETARY TO MOLEX ELECTRONIC TECHNOLOGIES, LLC AND SHOULD NOT BE USED WITHOUT WRITTEN PERMISSION

DIMENSION UNITS	SCALE
mm	2:1

GENERAL TOLERANCES (UNLESS SPECIFIED)

ANGULAR TOL	±	3.0 °
4 PLACES	±	
3 PLACES	±	
2 PLACES	±	0.1
1 PLACE	±	0.2
0 PLACES	±	

DRAFT WHERE APPLICABLE MUST REMAIN WITHIN DIMENSIONS

CURRENT REV DESC:

EC NO:	660404	
DRWN:	ATEEGULLA	2021/04/08
CHK'D:	KBORUSZEWSKI	2021/04/08
APPR:	KBORUSZEWSKI	2021/04/08

INITIAL REVISION:

DRWN:	APROFFITT	2015/01/29
APPR:	VKOSHY	2015/05/21

THIRD ANGLE PROJECTION

DRAWING: E-SIZE

SERIES: 160076

molex

MX150 HYB RCPT DUAL ROW SEALED ASSY
DUAL ROW SEALED ASSEMBLY MAT SEAL

PRODUCT CUSTOMER DRAWING

DOCUMENT NUMBER	DOC TYPE	DOC PART	REVISION
SD-160076-0001	PSD	001	A8

MATERIAL NUMBER	CUSTOMER	SHEET NUMBER
SEE NOTE 2a.	GENERAL MARKET	5 OF 7

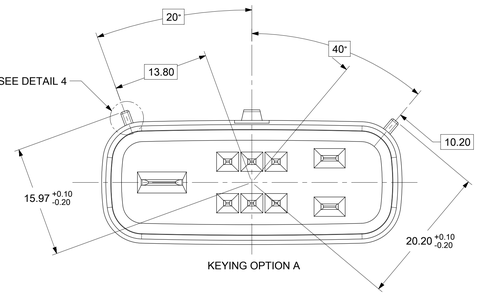

KEYING OPTION A

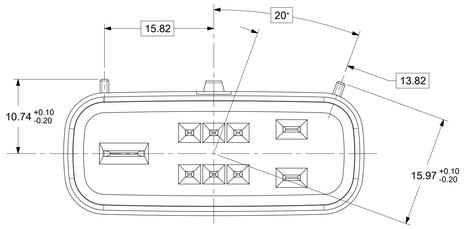

KEYING OPTION B

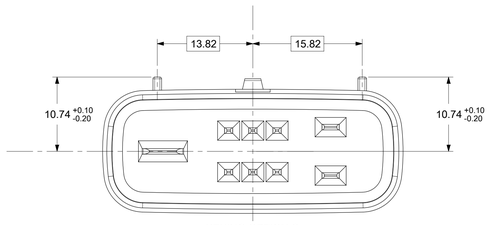

KEYING OPTION C

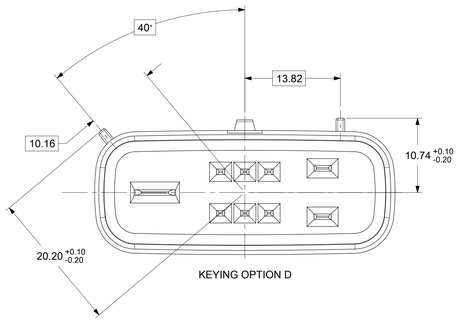

KEYING OPTION D

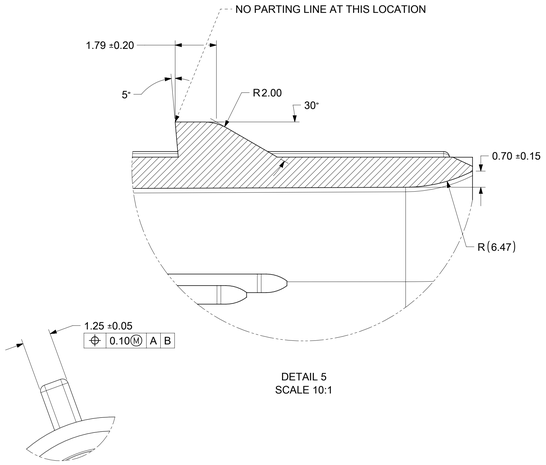

DETAIL 5
SCALE 10:1

DETAIL 4
SCALE 10:1
SEE KEYING OPTION VIEWS
FOR POSITIONS

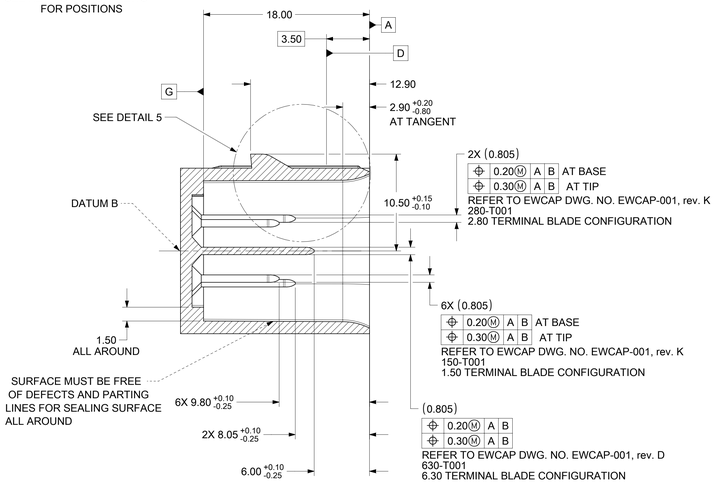

SECTION X-X
SCALE 4:1

IF HEADER IS RECESSED INTO POCKET. THESE DIMENSIONS REPRESENT
THE MINIMUM CLEARANCE REQUIRED FOR THE MATING SHROUD.

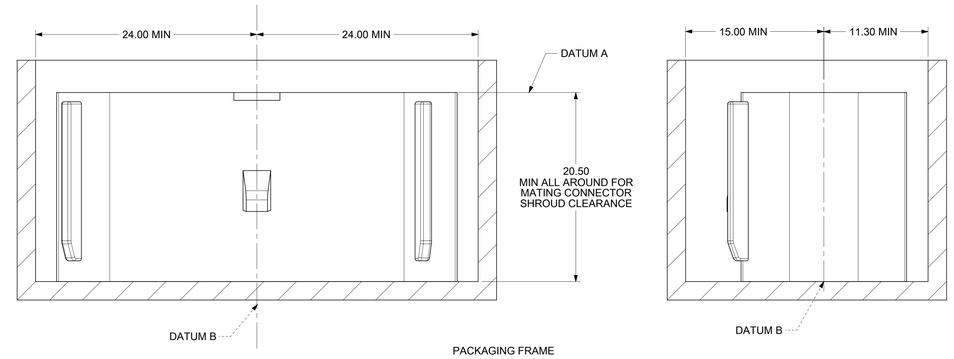

PACKAGING FRAME

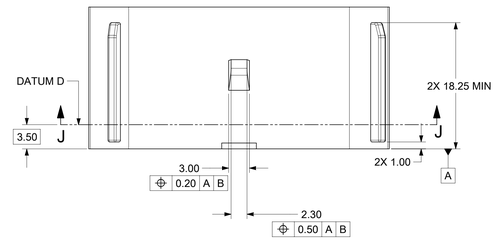

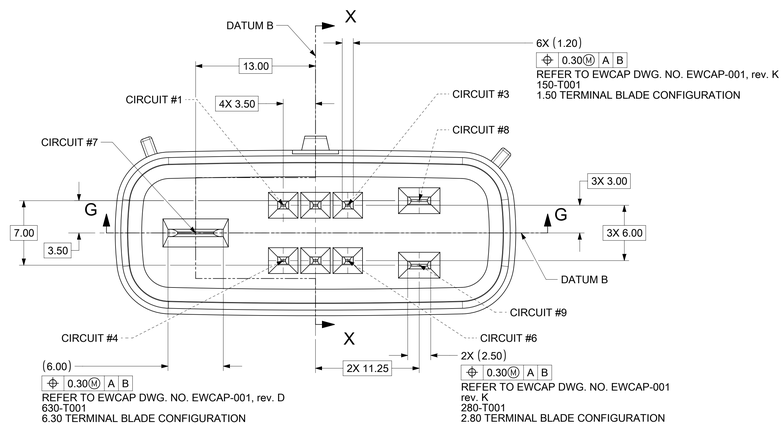

NOTICE

THIS DRAWING OR PORTIONS OF IT, ARE CONTROLLED BY THE ELECTRICAL WIRING COMPONENTS APPLICATION PARTNERSHIP (EWCAP), A SUBGROUP OF THE UNITED STATES CONSORTIUM FOR AUTOMOTIVE RESEARCH LLC (USCAR). USCAR IS A PARTNERSHIP BETWEEN CHRYSLER GROUP LLC, FORD MOTOR COMPANY, AND GENERAL MOTORS CORPORATION ANY CHANGE TO A EWCAP CONTROLLED PORTION OF THIS DRAWING, INCLUDING A "RECORD CHANGE" MUST BE APPROVED. IN WRITING, BY THE RESPONSIBLE EWCAP MEMBER FROM EACH USCAR COMPANY. EACH EWCAP MEMBER AUTHORIZED TO SIGN FOR HIS OR HER COMPANY IS RESPONSIBLE FOR OBTAINING ALL NECESSARY APPROVALS WITHIN THAT COMPANY PRIOR TO SIGNING FOR APPROVAL OF THE CHANGE. EWCAP EXPRESSLY PROHIBITS ANY PARTY FROM CHANGING EITHER ANY EWCAP CONTROLLED PORTION OF THIS DRAWING OR ANY ASSOCIATED TOOLING BEFORE RECEIVING AN APPROVAL SIGNED BY AN AUTHORIZED REPRESENTATIVE FROM EACH EWCAP PARTNER. REFERENCE TO THE SIGNED APPROVAL FORM MUST BE ENTERD IN THIS DRAWING'S CONTROL COLUMN.

NOTES: UNLESS OTHERWISE SPECIFIED

1. ALL DIMENSIONS SHOWN IN MILLIMETERS.

2. DIMENSIONING AND TOLERANCING PER ASME Y14.5M-1994

3. 0.25 RADII ON ALL CORNERS SHOWN SHARP.

4. UNSPECIFIED RADII: 0.25 EXCEPT AS NOTED.

5. STANDARD COLORS FOR POLARIZATION (SEE CHART).
DEVIATION REQUIRES APPROVAL OF AUTHORIZED PERSON.

6. REFER TO "SAE/USCAR 12 CONNECTOR GUIDELINES"
FOR ADDITIONAL REQUIREMENTS.

7. EXCEPT WHERE NOTED, DRAFT ON OUTSIDE SURFACES IS PERMISSIBLE
WITHIN TOLERANCE.

8. SYMBOL INDICATES DRAFT DIRECTION.

9. FOR TERMINAL MATERIAL, DIMENSIONAL, AND COATING REQUIREMENTS
AND ANY BLADE TERMINAL DESIGN INFORMATION NOT SHOWN ON THIS
DRAWING SEE EWCAP DRW. NO. EWCAP-001, rev. K
1.5 PLATING:
UNDERPLATING: ELECTRO-DEPOSITED NICKEL SULFAMATE 1.00-1.80 MICROMETERS
TOP LAYER: ELECTRO-DEPOSITED SILVER 1.90-3.30 MICROMETERS
ENVIRONMENTAL BARRIER: EVABRITE-S
2.8 PLATING:
UNDERPLATING: ELECTRO-DEPOSITED NICKEL SULFAMATE 1.00-1.80 MICROMETERS
TOP LAYER: ELECTRO-DEPOSITED SILVER 1.90-3.30 MICROMETERS
ENVIRONMENTAL BARRIER: EVABRITE-S
6.3 PLATING:
UNDERPLATING: ELECTRO-DEPOSITED NICKEL 1.25-2.25 MICROMETERS
TOP LAYER: ELECTRO-DEPOSITED SILVER 1.90-3.30 MICROMETERS
ENVIRONMENTAL BARRIER: EVABRITE-S

10. A FULL SHROUD ON THE MATING CONNECTOR IS REQUIRED
TO INSURE THAT THE CONNECTOR-HEADER POLARIZATION
FEATURES (OPTIONS A THRU D) WILL FUNCTION. THE FULL
SHROUD ALSO PREVENTS SCOOP DAMAGE TO THE HEADER
PINS. REFER TO "SAE/USCAR-12 CONNECTOR DESIGN
GUIDE LINES" FOR ADDITIONAL INFORMATION.

11. REFER TO USCAR/EWCAP PART LIST AS FOUND ON WEBSITE
http://www.uscarteams.org

12. THIS IS A 100% CAD GENERATED PART. THE CAD MATHEMATICAL DATA
IS THE MASTER FOR THIS PART. FOR DIMENSIONAL OR ANY INFORMATION
NOT SHOWN ON THIS DRAWING, ANALYZE THE CAD MODEL.

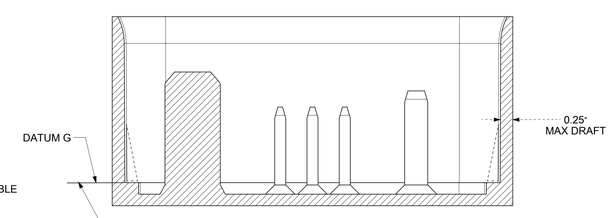

SECTION G-G
SCALE 4:1

CONSTRUCTION BELOW THIS SURFACE IS
NOT CONTROLED BY EWCAP. NO PLASTIC
FEATURES MAY EXTEND ABOVE THIS SURFACE

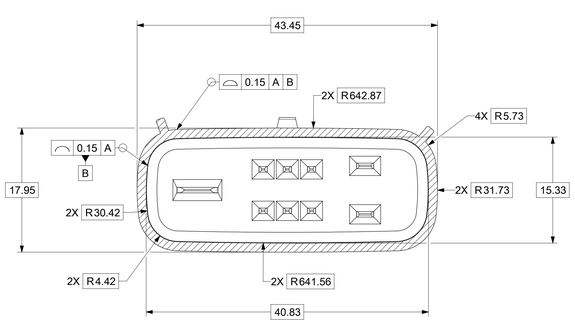

SECTION J-J

D	STONE GRAY
C	DARK GRAY
B	LIGHT GRAY
A	BLACK
OPTION	MATING CONNECTOR COLOR

DOCUMENT STATUS	P1	RELEASE DATE	2021/03/03 23:36:12

SYMBOLS	
A	= 0
C	= 0
D	= 0
S	= 0
	= 0
	= 0
	= 0
	= 0
	= 0

THIS DRAWING CONTAINS INFORMATION THAT IS PROPRIETARY TO MOLEX ELECTRONIC TECHNOLOGIES, LLC AND SHOULD NOT BE USED WITHOUT WRITTEN PERMISSION

DIMENSION UNITS	SCALE
mm	4:1

GENERAL TOLERANCES (UNLESS SPECIFIED)

ANGULAR TOL	±	3.0 °
4 PLACES	±	
3 PLACES	±	
2 PLACES	±	0.1
1 PLACE	±	0.2
0 PLACES	±	

DRAFT WHERE APPLICABLE MUST REMAIN WITHIN DIMENSIONS

CURRENT REV DESC:

EC NO:	660404	
DRWN:	ATEEGULLA	2021/04/08
CHK'D:	KBORUSZEWSKI	2021/04/08
APPR:	KBORUSZEWSKI	2021/04/08

INITIAL REVISION:

DRWN:	APROFFITT	2015/01/29
APPR:	VKOSHY	2015/05/21

molex

MX150 HYB RCPT DUAL ROW SEALED ASSY
DUAL ROW SEALED ASSEMBLY MAT SEAL

PRODUCT CUSTOMER DRAWING

DOCUMENT NUMBER	DOC TYPE	DOC PART	REVISION
SD-160076-0001	PSD	001	A8

THIRD ANGLE PROJECTION	DRAWING	SERIES	MATERIAL NUMBER	CUSTOMER	SHEET NUMBER
	E-SIZE	160076	SEE NOTE 2a.	GENERAL MARKET	6 OF 7

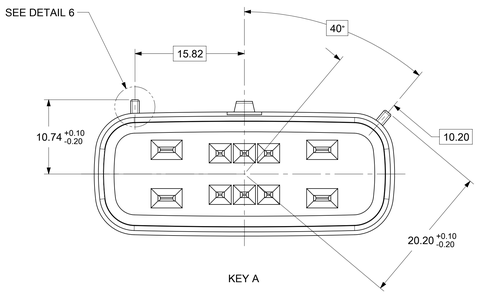

KEY A

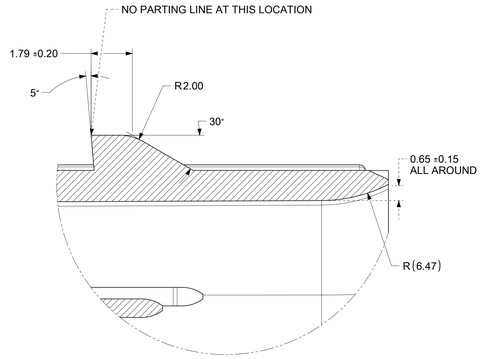

DETAIL 1
SCALE 10:1

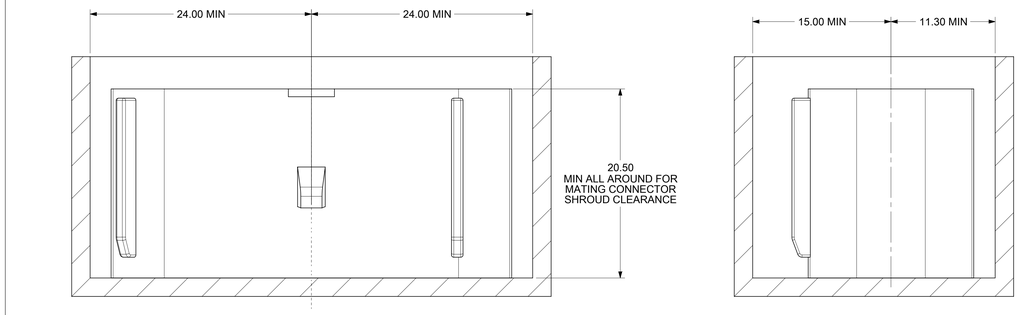

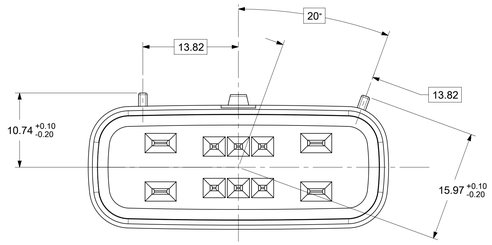

KEY B

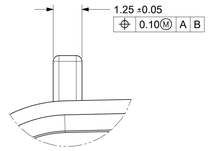

DETAIL 6
SCALE 10:1

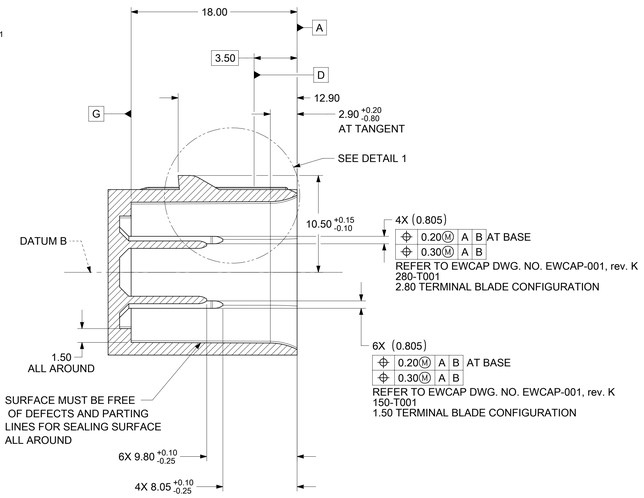

SECTION N-N
SCALE 4:1

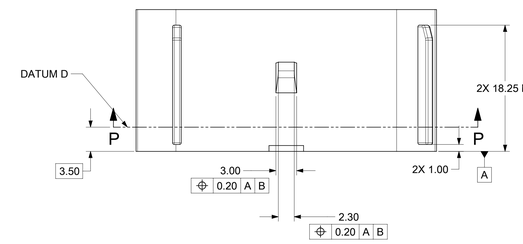

NOTICE

THIS DRAWING OR PORTIONS OF IT, ARE CONTROLLED BY THE ELECTRICAL WIRING COMPONENTS APPLICATION PARTNERSHIP (EWCAP), A SUBGROUP OF THE UNITED STATES CONSORTIUM FOR AUTOMOTIVE RESEARCH LLC (USCAR). USCAR IS A PARTNERSHIP BETWEEN CHRYSLER GROUP LLC, FORD MOTOR COMPANY, AND GENERAL MOTORS CORPORATION ANY CHANGE TO A EWCAP CONTROLLED PORTION OF THIS DRAWING, INCLUDING A "RECORD CHANGE" MUST BE APPROVED. IN WRITING, BY THE RESPONSIBLE EWCAP MEMBER FROM EACH USCAR COMPANY. EACH EWCAP MEMBER AUTHORIZED TO SIGN FOR HIS OR HER COMPANY IS RESPONSIBLE FOR OBTAINING ALL NECESSARY APPROVALS WITHIN THAT COMPANY PRIOR TO SIGNING FOR APPROVAL OF THE CHANGE. EWCAP EXPRESSLY PROHIBITS ANY PARTY FROM CHANGING EITHER ANY EWCAP CONTROLLED PORTION OF THIS DRAWING OR ANY ASSOCIATED TOOLING BEFORE RECEIVING AN APPROVAL SIGNED BY AN AUTHORIZED REPRESENTATIVE FROM EACH EWCAP PARTNER. REFERENCE TO THE SIGNED APPROVAL FORM MUST BE ENTERD IN THIS DRAWING'S CONTROL COLUMN.

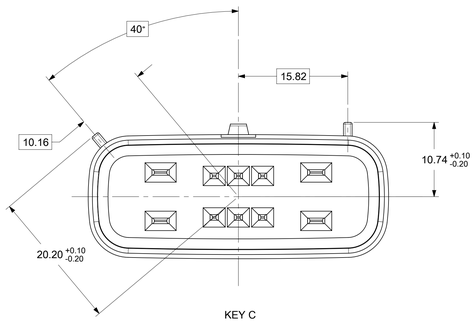

KEY C

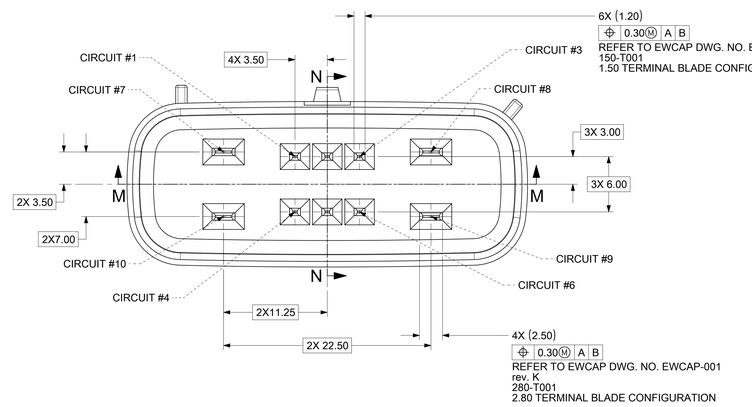

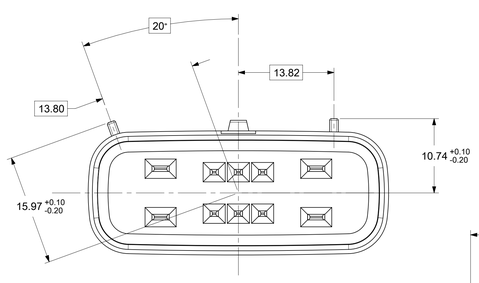

KEY D

NOTES: UNLESS OTHERWISE SPECIFIED

1. ALL DIMENSIONS SHOWN IN MILLIMETERS.

2. DIMENSIONING AND TOLERANCING PER ASME Y14.5M-1994

3. 0.25 RADII ON ALL CORNERS SHOWN SHARP.

4. UNSPECIFIED RADII: 0.25 EXCEPT AS NOTED.

5. STANDARD COLORS FOR POLARIZATION (SEE CHART).
   DEVIATION REQUIRES APPROVAL OF AUTHORIZED PERSON.

6. REFER TO "SAE/USCAR 12 CONNECTOR GUIDELINES"
   FOR ADDITIONAL REQUIREMENTS.

7. EXCEPT WHERE NOTED, DRAFT ON OUTSIDE SURFACES IS PERMISSIBLE
   WITHIN TOLERANCE.

8. SYMBOL INDICATES DRAFT DIRECTION.

9. FOR TERMINAL MATERIAL, DIMENSIONAL, AND COATING REQUIREMENTS
   AND ANY BLADE TERMINAL DESIGN INFORMATION NOT SHOWN ON THIS
   DRAWING SEE EWCAP DRW. NO. EWCAP-001, rev. K
   1.5 PLATING:
   UNDERPLATING: ELECTRO-DEPOSITED NICKEL SULFAMATE 1.00-1.80 MICROMETERS
   TOP LAYER: ELECTRO-DEPOSITED SILVER 1.90-3.30 MICROMETERS
   ENVIRONMENTAL BARRIER: EVABRITE-S
   2.8 PLATING:
   UNDERPLATING: ELECTRO-DEPOSITED NICKEL SULFAMATE 1.00-1.80 MICROMETERS
   TOP LAYER: ELECTRO-DEPOSITED SILVER 1.90-3.30 MICROMETERS
   ENVIRONMENTAL BARRIER: EVABRITE-S

10. A FULL SHROUD ON THE MATING CONNECTOR IS REQUIRED
    TO INSURE THAT THE CONNECTOR-HEADER POLARIZATION
    FEATURES (OPTIONS A THRU D) WILL FUNCTION. THE FULL
    SHROUD ALSO PREVENTS SCOOP DAMAGE TO THE HEADER
    PINS. REFER TO "SAE/USCAR-12 CONNECTOR DESIGN
    GUIDE LINES" FOR ADDITIONAL INFORMATION.

11. REFER TO USCAR/EWCAP PART LIST AS FOUND ON WEBSITE
    http://www.uscarteams.org

12. THIS IS A 100% CAD GENERATED PART. THE CAD MATHEMATICAL DATA
    IS THE MASTER FOR THIS PART. FOR DIMENSIONAL OR ANY INFORMATION
    NOT SHOWN ON THIS DRAWING, ANALYZE THE CAD MODEL.

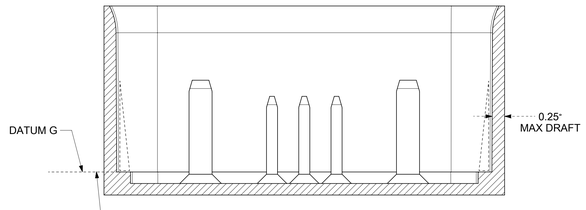

SECTION M-M
SCALE 4:1

CONSTRUCTION BELOW THIS SURFACE IS
NOT CONTROLED BY EWCAP. NO PLASTIC
FEATURES MAY EXTEND ABOVE THIS SURFACE

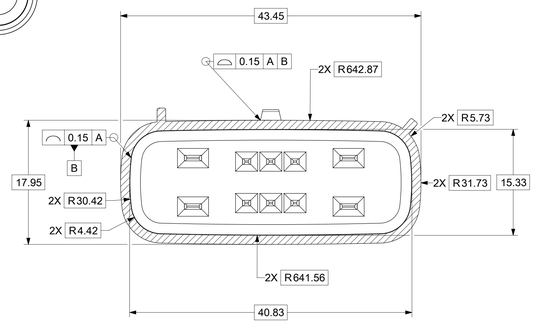

SECTION P-P
SCALE 3:1

D	STONE GRAY
C	DARK GRAY
B	LIGHT GRAY
A	BLACK
OPTION	MATING CONNECTOR COLOR

DOCUMENT STATUS	P1	RELEASE DATE	2021/03/03 23:36:12

SYMBOLS	
EA	= 0
EC	= 0
EB	= 0
S	= 0
▼	= 0
C	= 0
☒	= 0
■	= 0
6	= 0

THIS DRAWING CONTAINS INFORMATION THAT IS PROPRIETARY TO MOLEX ELECTRONIC TECHNOLOGIES, LLC AND SHOULD NOT BE USED WITHOUT WRITTEN PERMISSION

DIMENSION UNITS	SCALE
mm	4:1
GENERAL TOLERANCES (UNLESS SPECIFIED)	
ANGULAR TOL	± 3.0 °
4 PLACES	±
3 PLACES	±
2 PLACES	± 0.1
1 PLACE	± 0.2
0 PLACES	±
DRAFT WHERE APPLICABLE MUST REMAIN WITHIN DIMENSIONS	

CURRENT REV DESC:

EC NO:	660404	
DRWN:	ATEEGULLA	2021/04/08
CHK'D:	KBORUSZEWSKI	2021/04/08
APPR:	KBORUSZEWSKI	2021/04/08

INITIAL REVISION:

DRWN:	APROFFITT	2015/01/29
APPR:	VKOSHY	2015/05/21

molex

MX150 HYB RCPT DUAL ROW SEALED ASSY
DUAL ROW SEALED ASSEMBLY MAT SEAL

PRODUCT CUSTOMER DRAWING

DOCUMENT NUMBER	DOC TYPE	DOC PART	REVISION
SD-160076-0001	PSD	001	A8

THIRD ANGLE PROJECTION	DRAWING	SERIES	MATERIAL NUMBER	CUSTOMER	SHEET NUMBER
	E-SIZE	160076	SEE NOTE 2a.	GENERAL MARKET	7 OF 7

molex

MX150 1.5/6.3 HYBRID 8 WAY RECEPTACLE SEALED ASSEMBLY MAT SEAL
BOM AND PIN OUT SHEET

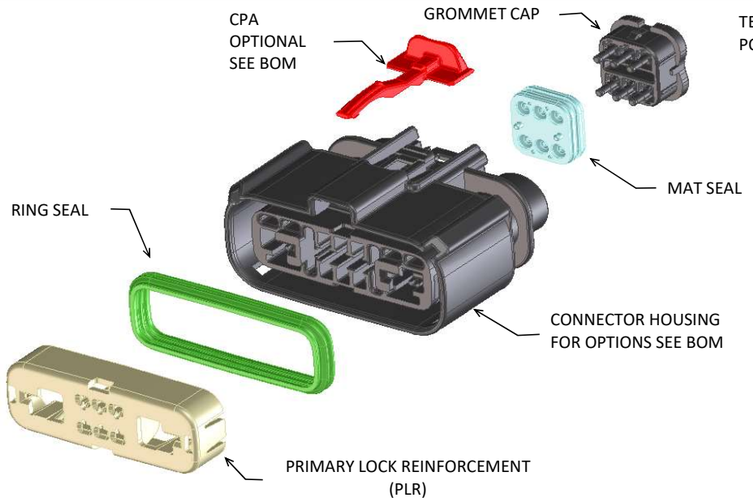

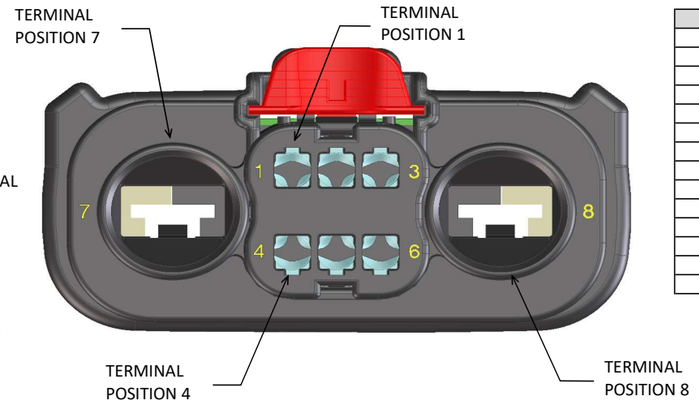

ABBREVIATION	DESCRIPTION	COLOR	MATERIAL
A1-BLK	HOUSING KEYING OPTION A	BLACK	PA6 GF40
B1-LG	HOUSING KEYING OPTION B	LIGHT GRAY	PA6 GF40
C1-DG	HOUSING KEYING OPTION C	DARK GRAY	PA6 GF40
D1-SG	HOUSING KEYING OPTION D	STONE GRAY	PA6 GF40
A1-BLK-CLIP	HOUSING KEYING OPTION A WITH CLIPSLOT	BLACK	PA6 GF40
B1-LG-CLIP	HOUSING KEYING OPTION B WITH CLIPSLOT	LIGHT GRAY	PA6 GF40
C1-DG-CLIP	HOUSING KEYING OPTION C WITH CLIPSLOT	DARK GRAY	PA6 GF40
D1-SG-CLIP	HOUSING KEYING OPTION D WITH CLIPSLOT	STONE GRAY	PA6 GF40
GCP	GROMMET CAP (PLUGGED)	BLACK	PA6 GF40
GCO	GROMMET CAP (OPEN)	BLACK	PA6 GF40
PLR	PLR	NATURAL	PA6 GF40
CPA	CPA	RED	PBT GF20
M	MAT SEAL	LIGHT BLUE	INHERENTLY LUBRICATED SILICONE
R	RING SEAL	GREEN	INHERENTLY LUBRICATED SILICONE

FOR ADDITIONAL INFORMATION SEE SD-160076-0001

ASSEMBLY DESCRIPTION	ASSEMBLY PART NUMBER	COMPONENT						BLOCKED TERMINALS								STATUS	COMMENTS	OPTIONAL ATTATCHMENTS SOLD SEPERATELY	
		THE PRESENCE OF AN ABBREVIATION INDICATES THE PRESENCE OF THAT COMPONENT.						CAVITY WITH A NUMBER INDICATES BLOCKED TERMINAL POSITION CAVITY WITHOUT A NUMBER INDICATES OPEN TERMINAL POSITION											
		HOUSING KEY/COLOR	GROMMET CAP	PLR	CPA	MAT SEAL	RING SEAL	1	2	3	4	5	6	7	8			BACKSHELL WITH RIBS	BACKSHELL WITHOUT RIBS
KEY A, BLACK, W/O CPA	160078-3001	A1-BLK	GCO	PLR		M	R									SALEABLE		TBD	TBD
KEY B, LIGHT GRAY, W/O CPA	160078-3002	B1-LG	GCO	PLR		M	R									SALEABLE		TBD	TBD
KEY C, DARK GRAY, W/O CPA	160078-3003	C1-DG	GCO	PLR		M	R									SALEABLE		TBD	TBD
KEY D, STONE GRAY, W/O CPA	160078-3004	D1-SG	GCO	PLR		M	R									SALEABLE		TBD	TBD
VOID KEY	160078-3005																		
KEY A, BLACK, W/ CPA	160078-3006	A1-BLK	GCO	PLR	CPA	M	R									SALEABLE		TBD	TBD
KEY B, LIGHT GRAY, W/ CPA	160078-3007	B1-LG	GCO	PLR	CPA	M	R									SALEABLE		TBD	TBD
KEY C, DARK GRAY, W/ CPA	160078-3008	C1-DG	GCO	PLR	CPA	M	R									SALEABLE		TBD	TBD
KEY D, STONE GRAY, W/ CPA	160078-3009	D1-SG	GCO	PLR	CPA	M	R									SALEABLE		TBD	TBD
VOID KEY	160078-3010																		
KEY A, BLACK, W/ CLIPSLOT, W/O CPA	160078-3011	A1-BLK-CLIP	GCO	PLR		M	R									SALEABLE		TBD	TBD
KEY B, LIGHT GRAY, W/ CLIPSLOT, W/O CPA	160078-3012	B1-LG-CLIP	GCO	PLR		M	R									SALEABLE		TBD	TBD
KEY C, DARK GRAY, W/ CLIPSLOT, W/O CPA	160078-3013	C1-DG-CLIP	GCO	PLR		M	R									SALEABLE		TBD	TBD
KEY D, STONE GRAY, W/ CLIPSLOT, W/O CPA	160078-3014	D1-SG-CLIP	GCO	PLR		M	R									SALEABLE		TBD	TBD
VOID KEY	160078-3015																		
KEY A, BLACK, W/ CLIPSLOT, W/ CPA	160078-3016	A1-BLK-CLIP	GCO	PLR	CPA	M	R									SALEABLE		TBD	TBD
KEY B, LIGHT GRAY, W/ CLIPSLOT, W/ CPA	160078-3017	B1-LG-CLIP	GCO	PLR	CPA	M	R									SALEABLE		TBD	TBD
KEY C, DARK GRAY, W/ CLIPSLOT, W/ CPA	160078-3018	C1-DG-CLIP	GCO	PLR	CPA	M	R									SALEABLE		TBD	TBD
KEY D, STONE GRAY, W/ CLIPSLOT, W/ CPA	160078-3019	D1-SG-CLIP	GCO	PLR	CPA	M	R									SALEABLE		TBD	TBD
VOID KEY	160078-3020																		
KEY A, BLACK, W/ CPA	160078-3021	A1-BLK	GCP	PLR	CPA	M	R							7		SALEABLE		TBD	TBD
KEY A, BLACK, W/ CPA	160078-3022	A1-BLK	GCP	PLR	CPA	M	R			3	4	5	6			SALEABLE		TBD	TBD
KEY A, BLACK, W/ CPA	160078-3023	A1-BLK	GCP	PLR	CPA	M	R	1	2	3	4	5	6			SALEABLE		TBD	TBD
KEY B, LIGHT GRAY, W/ CPA	160078-3024	B1-LG	GCP	PLR	CPA	M	R			3	4	5	6			SALEABLE		TBD	TBD
KEY A, BLACK, W/ CLIPSLOT, W/ CPA	160078-3025	A1-BLK-CLIP	GCP	PLR	CPA	M	R	1	2	3						SALEABLE		TBD	TBD
KEY C, DARK GRAY, W/O CPA	160078-3026	C1-DG	GCP	PLR		M	R				4	5	6			SALEABLE		TBD	TBD
KEY A, BLACK, W/ CPA	160078-3027	A1-BLK	GCP	PLR	CPA	M	R	1				5	6			SALEABLE		TBD	TBD
KEY A, BLACK, W/ CPA	160078-3028	A1-BLK	GCP	PLR	CPA	M	R				4	5	6			SALEABLE		TBD	TBD
KEY A, BLACK, W/ CPA	160078-3029	A1-BLK	GCP	PLR	CPA	M	R	1	2	3						SALEABLE		TBD	TBD

MX150 1.5/2.8/6.3 HYBRID 9 WAY RECEPTACLE SEALED ASSEMBLY MAT SEAL
BOM AND PIN OUT SHEET

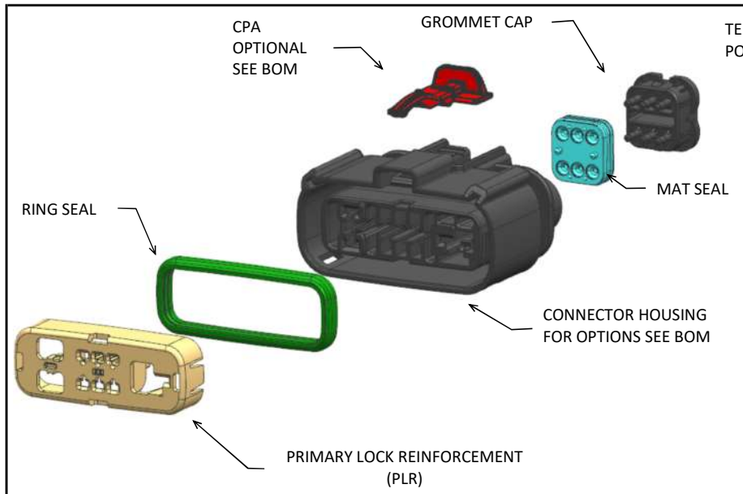

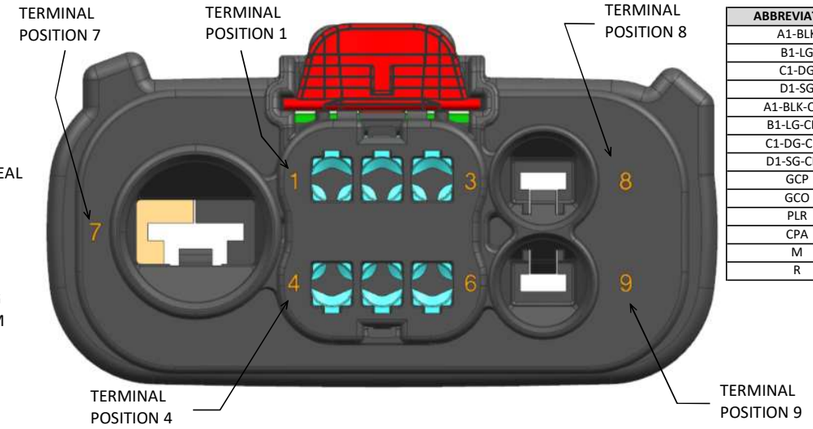

ABBREVIATION	DESCRIPTION	COLOR	MATERIAL
A1-BLK	HOUSING KEYING OPTION A	BLACK	PA6 GF40
B1-LG	HOUSING KEYING OPTION B	LIGHT GRAY	PA6 GF40
C1-DG	HOUSING KEYING OPTION C	DARK GRAY	PA6 GF40
D1-SG	HOUSING KEYING OPTION D	STONE GRAY	PA6 GF40
A1-BLK-CLIP	HOUSING KEYING OPTION A WITH CLIPSLOT	BLACK	PA6 GF40
B1-LG-CLIP	HOUSING KEYING OPTION B WITH CLIPSLOT	LIGHT GRAY	PA6 GF40
C1-DG-CLIP	HOUSING KEYING OPTION C WITH CLIPSLOT	DARK GRAY	PA6 GF40
D1-SG-CLIP	HOUSING KEYING OPTION D WITH CLIPSLOT	STONE GRAY	PA6 GF40
GCP	GROMMET CAP (PLUGGED)	BLACK	PA6 GF40
GCO	GROMMET CAP (OPEN)	BLACK	PA6 GF40
PLR	PLR	NATURAL	PA6 GF40
CPA	CPA	RED	PBT GF20
M	MAT SEAL	LIGHT BLUE	INHERENTLY LUBRICATED SILICONE
R	RING SEAL	GREEN	INHERENTLY LUBRICATED SILICONE

FOR ADDITIONAL INFORMATION SEE SD-160076-0001

ASSEMBLY DESCRIPTION	ASSEMBLY PART NUMBER	COMPONENT						BLOCKED TERMINALS									STATUS	COMMENTS	OPTIONAL ATTATCHMENTS SOLD SEPERATELY	
		THE PRESENCE OF AN ABBREVIATION INDICATES THE PRESENCE OF THAT COMPONENT.						CAVITY WITH A NUMBER INDICATES BLOCKED TERMINAL POSITION CAVITY WITHOUT A NUMBER INDICATES OPEN TERMINAL POSITION												
		HOUSING KEY/COLOR	GROMMET CAP	PLR	CPA	MAT SEAL	RING SEAL	1	2	3	4	5	6	7	8	9			BACKSHELL WITH RIBS	BACKSHELL WITHOUT RIBS
KEY A, BLACK, W/O CPA	160080-3001	A1-BLK	GCO	PLR		M	R										SALEABLE		TBD	TBD
KEY B, LIGHT GRAY, W/O CPA	160080-3002	B1-LG	GCO	PLR		M	R										SALEABLE		TBD	TBD
KEY C, DARK GRAY, W/O CPA	160080-3003	C1-DG	GCO	PLR		M	R										SALEABLE		TBD	TBD
KEY D, STONE GRAY, W/O CPA	160080-3004	D1-SG	GCO	PLR		M	R										SALEABLE		TBD	TBD
VOID KEY	160080-3005																			
KEY A, BLACK, W/ CPA	160080-3006	A1-BLK	GCO	PLR	CPA	M	R										SALEABLE		TBD	TBD
KEY B, LIGHT GRAY, W/ CPA	160080-3007	B1-LG	GCO	PLR	CPA	M	R										SALEABLE		TBD	TBD
KEY C, DARK GRAY, W/ CPA	160080-3008	C1-DG	GCO	PLR	CPA	M	R										SALEABLE		TBD	TBD
KEY D, STONE GRAY, W/ CPA	160080-3009	D1-SG	GCO	PLR	CPA	M	R										SALEABLE		TBD	TBD
VOID KEY	160080-3010																			
KEY A, BLACK, W/ CLIPSLOT, W/O CPA	160080-3011	A1-BLK-CLIP	GCO	PLR		M	R										SALEABLE		TBD	TBD
KEY B, LIGHT GRAY, W/ CLIPSLOT, W/O CPA	160080-3012	B1-LG-CLIP	GCO	PLR		M	R										SALEABLE		TBD	TBD
KEY C, DARK GRAY, W/ CLIPSLOT, W/O CPA	160080-3013	C1-DG-CLIP	GCO	PLR		M	R										SALEABLE		TBD	TBD
KEY D, STONE GRAY, W/ CLIPSLOT, W/O CPA	160080-3014	D1-SG-CLIP	GCO	PLR		M	R										SALEABLE		TBD	TBD
VOID KEY	160080-3015																			
KEY A, BLACK, W/ CLIPSLOT, W/ CPA	160080-3016	A1-BLK-CLIP	GCO	PLR	CPA	M	R										SALEABLE		TBD	TBD
KEY B, LIGHT GRAY, W/ CLIPSLOT, W/ CPA	160080-3017	B1-LG-CLIP	GCO	PLR	CPA	M	R										SALEABLE		TBD	TBD
KEY C, DARK GRAY, W/ CLIPSLOT, W/ CPA	160080-3018	C1-DG-CLIP	GCO	PLR	CPA	M	R										SALEABLE		TBD	TBD
KEY D, STONE GRAY, W/ CLIPSLOT, W/ CPA	160080-3019	D1-SG-CLIP	GCO	PLR	CPA	M	R										SALEABLE		TBD	TBD
VOID KEY	160080-3020																			
KEY A, BLACK, W/ CPA	160080-3021	A1-BLK	GCO	PLR	CPA	M	R									9	SALEABLE		TBD	TBD
KEY A, BLACK, W/ CPA	160080-3022	A1-BLK	GCP	PLR	CPA	M	R		2		4	5	6				SALEABLE		TBD	TBD

MX150 1.5/6.3 HYBRID 10 WAY RECEPTACLE SEALED ASSEMBLY MAT SEAL
BOM AND PIN OUT SHEET

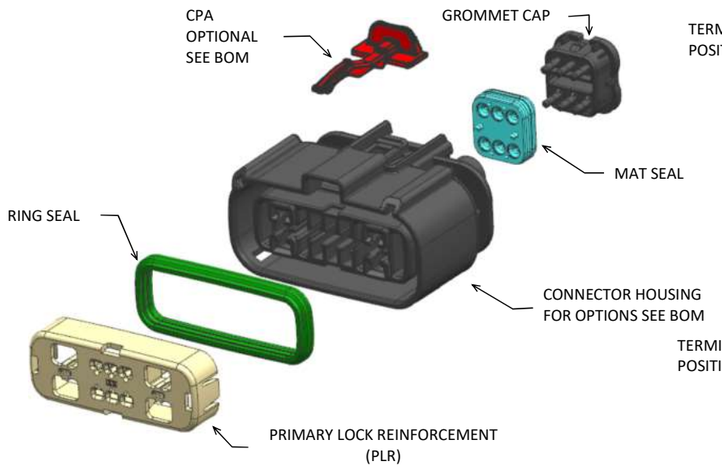

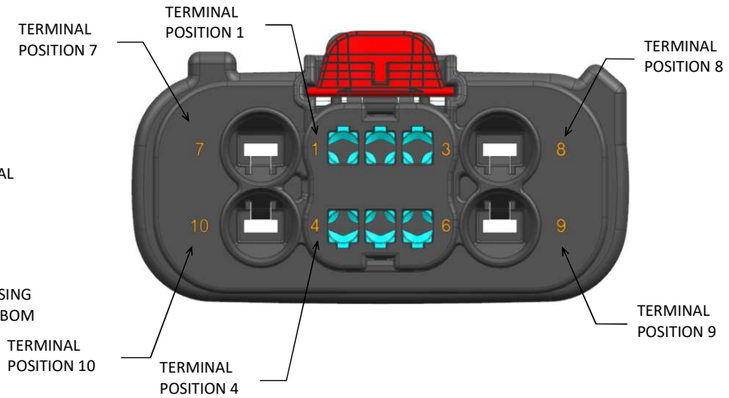

ABBREVIATION	DESCRIPTION	COLOR	MATERIAL
A1-BLK	HOUSING KEYING OPTION A	BLACK	PA6 GF40
B1-LG	HOUSING KEYING OPTION B	LIGHT GRAY	PA6 GF40
C1-DG	HOUSING KEYING OPTION C	DARK GRAY	PA6 GF40
D1-SG	HOUSING KEYING OPTION D	STONE GRAY	PA6 GF40
A1-BLK-CLIP	HOUSING KEYING OPTION A WITH CLIPSLOT	BLACK	PA6 GF40
B1-LG-CLIP	HOUSING KEYING OPTION B WITH CLIPSLOT	LIGHT GRAY	PA6 GF40
C1-DG-CLIP	HOUSING KEYING OPTION C WITH CLIPSLOT	DARK GRAY	PA6 GF40
D1-SG-CLIP	HOUSING KEYING OPTION D WITH CLIPSLOT	STONE GRAY	PA6 GF40
GCP	GROMMET CAP (PLUGGED)	BLACK	PA6 GF40
GCO	GROMMET CAP (OPEN)	BLACK	PA6 GF40
PLR	PLR	NATURAL	PA6 GF40
CPA	CPA	RED	PBT GF20
M	MAT SEAL	LIGHT BLUE	INHERENTLY LUBRICATED SILICONE
R	RING SEAL	GREEN	INHERENTLY LUBRICATED SILICONE

FOR ADDITIONAL INFORMATION SEE SD-160076-0001

ASSEMBLY DESCRIPTION	ASSEMBLY PART NUMBER	COMPONENT						BLOCKED TERMINALS										STATUS	COMMENTS	OPTIONAL ATTATCHMENTS SOLD SEPERATELY	
		THE PRESENCE OF AN ABBREVIATION INDICATES THE PRESENCE OF THAT COMPONENT.						CAVITY WITH A NUMBER INDICATES BLOCKED TERMINAL POSITION CAVITY WITHOUT A NUMBER INDICATES OPEN TERMINAL POSITION													
		HOUSING KEY/COLOR	GROMMET CAP	PLR	CPA	MAT SEAL	RING SEAL	1	2	3	4	5	6	7	8	9	10			BACKSHELL WITH RIBS	BACKSHELL WITHOUT RIBS
KEY A, BLACK, W/O CPA	160076-5001	A1-BLK	GCO	PLR		M	R											SALEABLE		TBD	TBD
KEY B, LIGHT GRAY, W/O CPA	160076-5002	B1-LG	GCO	PLR		M	R											SALEABLE		TBD	TBD
KEY C, DARK GRAY, W/O CPA	160076-5003	C1-DG	GCO	PLR		M	R											SALEABLE		TBD	TBD
KEY D, STONE GRAY, W/O CPA	160076-5004	D1-SG	GCO	PLR		M	R											SALEABLE		TBD	TBD
VOID KEY	160076-5005																				
KEY A, BLACK, W/ CPA	160076-5006	A1-BLK	GCO	PLR	CPA	M	R											SALEABLE		TBD	TBD
KEY B, LIGHT GRAY, W/ CPA	160076-5007	B1-LG	GCO	PLR	CPA	M	R											SALEABLE		TBD	TBD
KEY C, DARK GRAY, W/ CPA	160076-5008	C1-DG	GCO	PLR	CPA	M	R											SALEABLE		TBD	TBD
KEY D, STONE GRAY, W/ CPA	160076-5009	D1-SG	GCO	PLR	CPA	M	R											SALEABLE		TBD	TBD
VOID KEY	160076-5010																				
KEY A, BLACK, W/ CLIPSLOT, W/O CPA	160076-5011	A1-BLK-CLIP	GCO	PLR		M	R											SALEABLE		TBD	TBD
KEY B, LIGHT GRAY, W/ CLIPSLOT, W/O CPA	160076-5012	B1-LG-CLIP	GCO	PLR		M	R											SALEABLE		TBD	TBD
KEY C, DARK GRAY, W/ CLIPSLOT, W/O CPA	160076-5013	C1-DG-CLIP	GCO	PLR		M	R											SALEABLE		TBD	TBD
KEY D, STONE GRAY, W/ CLIPSLOT, W/O CPA	160076-5014	D1-SG-CLIP	GCO	PLR		M	R											SALEABLE		TBD	TBD
VOID KEY	160076-5015																				
KEY A, BLACK, W/ CLIPSLOT, W/ CPA	160076-5016	A1-BLK-CLIP	GCO	PLR	CPA	M	R											SALEABLE		TBD	TBD
KEY B, LIGHT GRAY, W/ CLIPSLOT, W/ CPA	160076-5017	B1-LG-CLIP	GCO	PLR	CPA	M	R											SALEABLE		TBD	TBD
KEY C, DARK GRAY, W/ CLIPSLOT, W/ CPA	160076-5018	C1-DG-CLIP	GCO	PLR	CPA	M	R											SALEABLE		TBD	TBD
KEY D, STONE GRAY, W/ CLIPSLOT, W/ CPA	160076-5019	D1-SG-CLIP	GCO	PLR	CPA	M	R											SALEABLE		TBD	TBD
VOID KEY	160076-5020																				
KEY A, BLACK, W/ CPA	160076-5021	A1-BLK	GCP	PLR	CPA	M	R							7				SALEABLE		TBD	TBD
KEY A, BLACK, W/ CPA	160076-5022	A1-BLK	GCP	PLR	CPA	M	R									9	10	SALEABLE		TBD	TBD
KEY A, BLACK, W/ CPA	160076-5023	A1-BLK	GCP	PLR	CPA	M	R							7	8	9		SALEABLE		TBD	TBD
KEY A, BLACK, W/ CPA	160076-5024	A1-BLK	GCP	PLR	CPA	M	R							7	8		10	SALEABLE		TBD	TBD
KEY A, BLACK, W/ CPA	160076-5025	A1-BLK	GCP	PLR	CPA	M	R	1		3		5						SALEABLE		TBD	TBD
KEY A, BLACK, W/ CPA	160076-5026	A1-BLK	GCP	PLR	CPA	M	R		2		4		6					SALEABLE		TBD	TBD
KEY B, LIGHT GRAY, W/ CPA	160076-5027	B1-LG	GCP	PLR	CPA	M	R	1	2	3		5						SALEABLE		TBD	TBD
KEY A, BLACK, W/ CPA	160076-5028	A1-BLK	GCP	PLR	CPA	M	R	1	2	3		5						SALEABLE		TBD	TBD