Mounting Option
07-M3-0.5 Metric Threaded Inserts

Contact Detail
541-Wire Wrap .025 Sq.(0.64 Sq.) - Tail LG=.750(19.05)
.156 [3.96] Contact Spacing x .200 [5.08] Row Spacing

THIS IS A C.A.D. GENERATED DRAWING
DO NOT MAKE MANUAL REVISIONS TO MASTER.

ISSUE NUMBER	
ORIGINAL	1

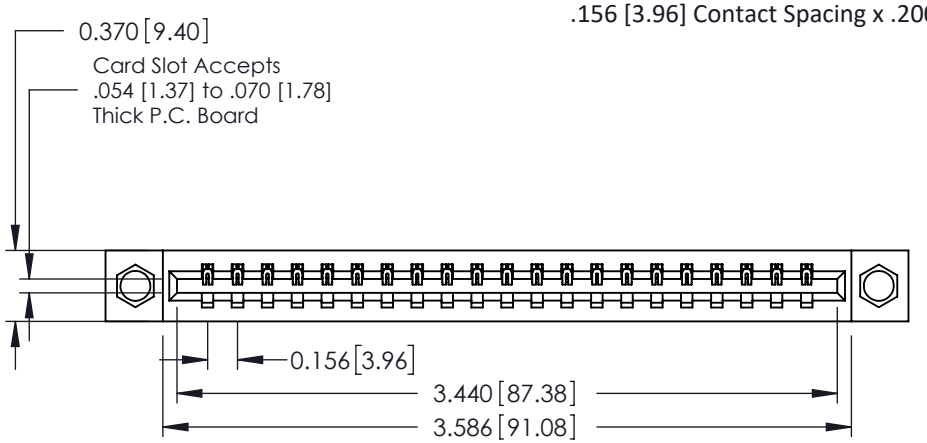

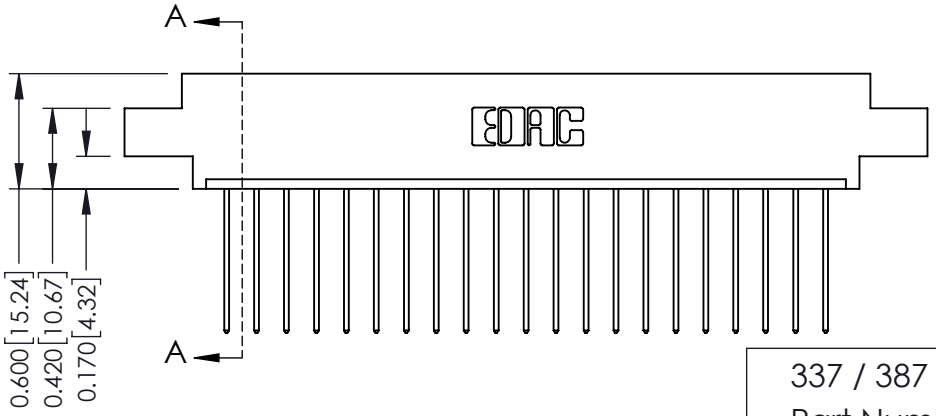

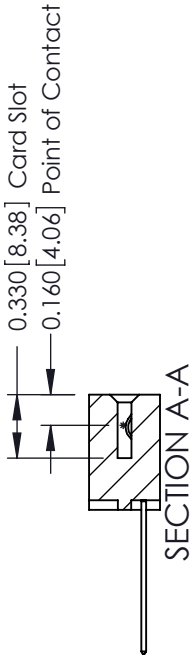

See Accompanying Pages for:
- **Contact Bend Details**
- **Mounting Options**

337 / 387 Series Card Edge Connector
Part Number: 387-021-541-607

EDAC INC
TORONTO, ONTARIO
CANADA
YOUR CONNECTION TO QUALITY & SERVICE

THESE DRAWINGS AND SPECIFICATIONS ARE THE PROPERTY OF EDAC INC.,AND SHALL NOT BE REPRODUCED,OR COPIED OR USED AS THE BASIS FOR THE MANUFACTURE OR SALE OF APPARATUS WITHOUT WRITTEN PERMISSION.

ACAD REFERENCE NO.	337 ENG MASTER		
DRAWN:	J.LEE	DATE:	OCT. 06/09
CHECKED:		DATE:	
SCALE:	NTS	SHEET	1 OF 3
DRAWING NUMBER	337 Assembly	ISSUE	1

THIS IS A C.A.D. GENERATED DRAWING
DO NOT MAKE MANUAL REVISIONS TO MASTER.

ISSUE NUMBER	
ORIGINAL	1

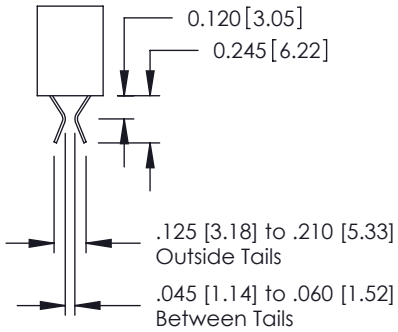

555 Contact Code

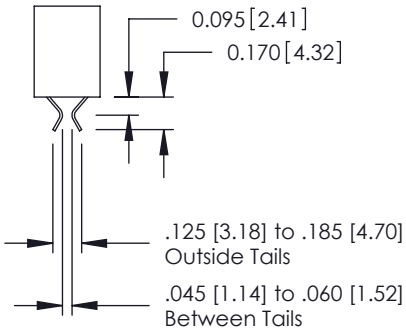

556 Contact Code

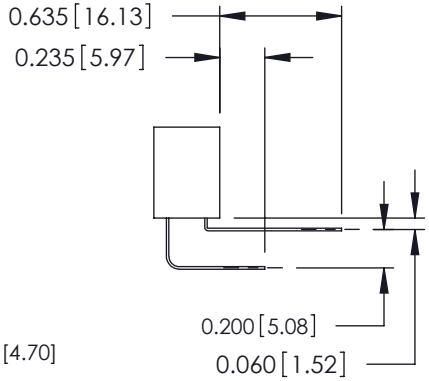

558 Contact Code

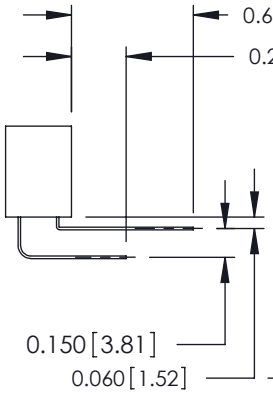

559 Contact Code

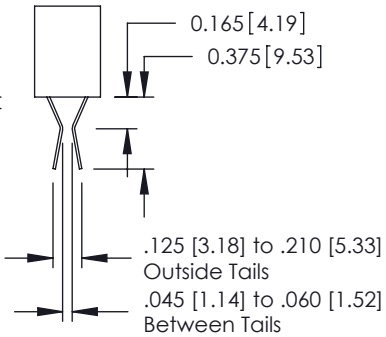

560 Contact Code

337 / 387 Series Card Edge Connector Contact Bend Detail

EDAC INC
TORONTO, ONTARIO
CANADA
YOUR CONNECTION TO QUALITY & SERVICE

THESE DRAWINGS AND SPECIFICATIONS ARE THE PROPERTY OF EDAC INC.,AND SHALL NOT BE REPRODUCED,OR COPIED OR USED AS THE BASIS FOR THE MANUFACTURE OR SALE OF APPARATUS WITHOUT WRITTEN PERMISSION.

ACAD REFERENCE NO.	337 ENG MASTER		
DRAWN: J.LEE		DATE: OCT. 06/09	
CHECKED:		DATE:	
SCALE: NTS		SHEET 2 OF 3	
DRAWING NUMBER			ISSUE
337 Assembly			1

THIS IS A C.A.D. GENERATED DRAWING
DO NOT MAKE MANUAL REVISIONS TO MASTER.

ISSUE NUMBER	
ORIGINAL	1

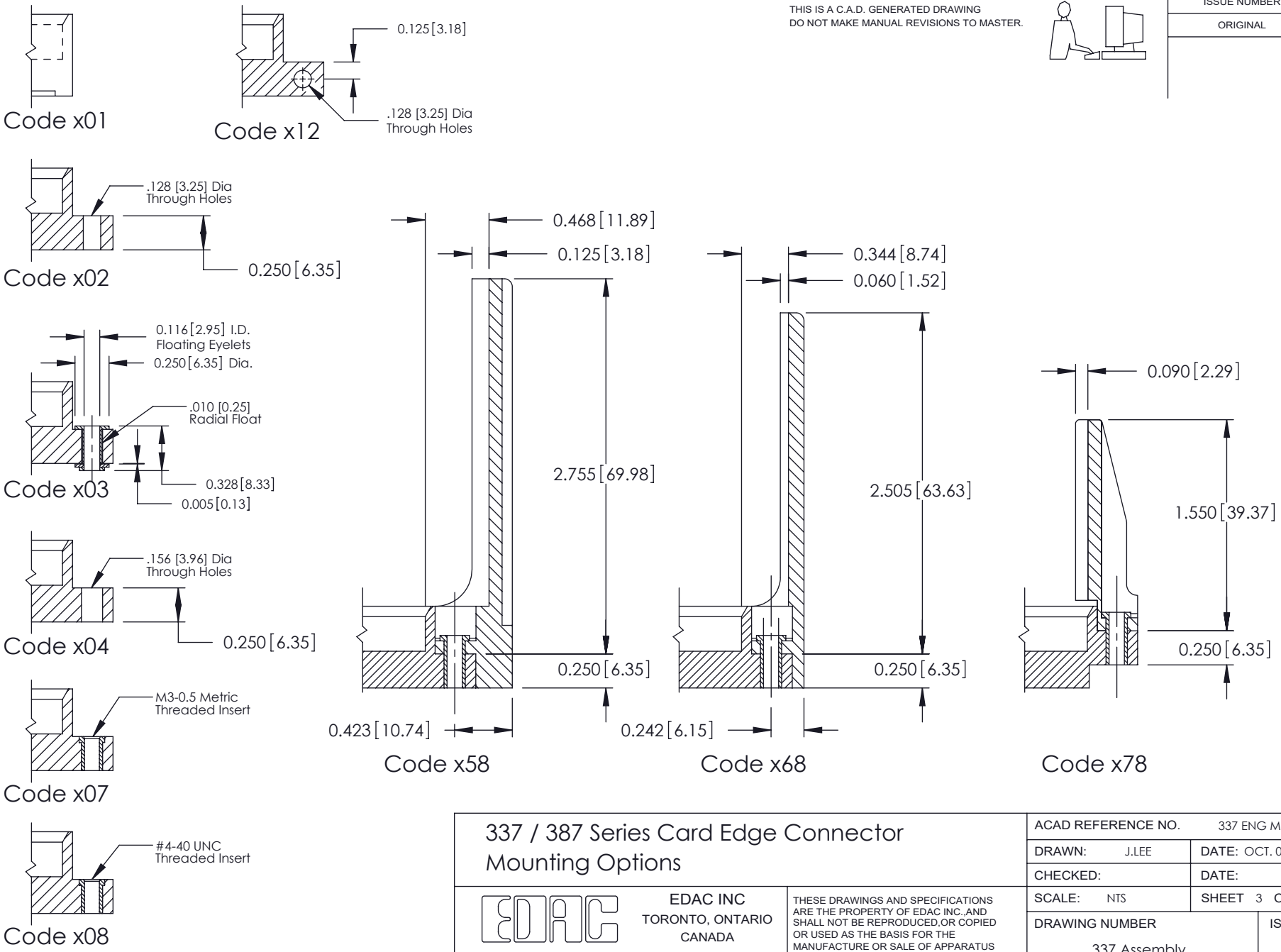

337 / 387 Series Card Edge Connector Mounting Options

EDAC INC
TORONTO, ONTARIO
CANADA
YOUR CONNECTION TO QUALITY & SERVICE

THESE DRAWINGS AND SPECIFICATIONS ARE THE PROPERTY OF EDAC INC.,AND SHALL NOT BE REPRODUCED,OR COPIED OR USED AS THE BASIS FOR THE MANUFACTURE OR SALE OF APPARATUS WITHOUT WRITTEN PERMISSION.

ACAD REFERENCE NO.	337 ENG MASTER		
DRAWN: J.LEE	DATE: OCT. 06/09		
CHECKED:	DATE:		
SCALE: NTS	SHEET 3 OF 3		
DRAWING NUMBER		ISSUE	
337 Assembly		1	