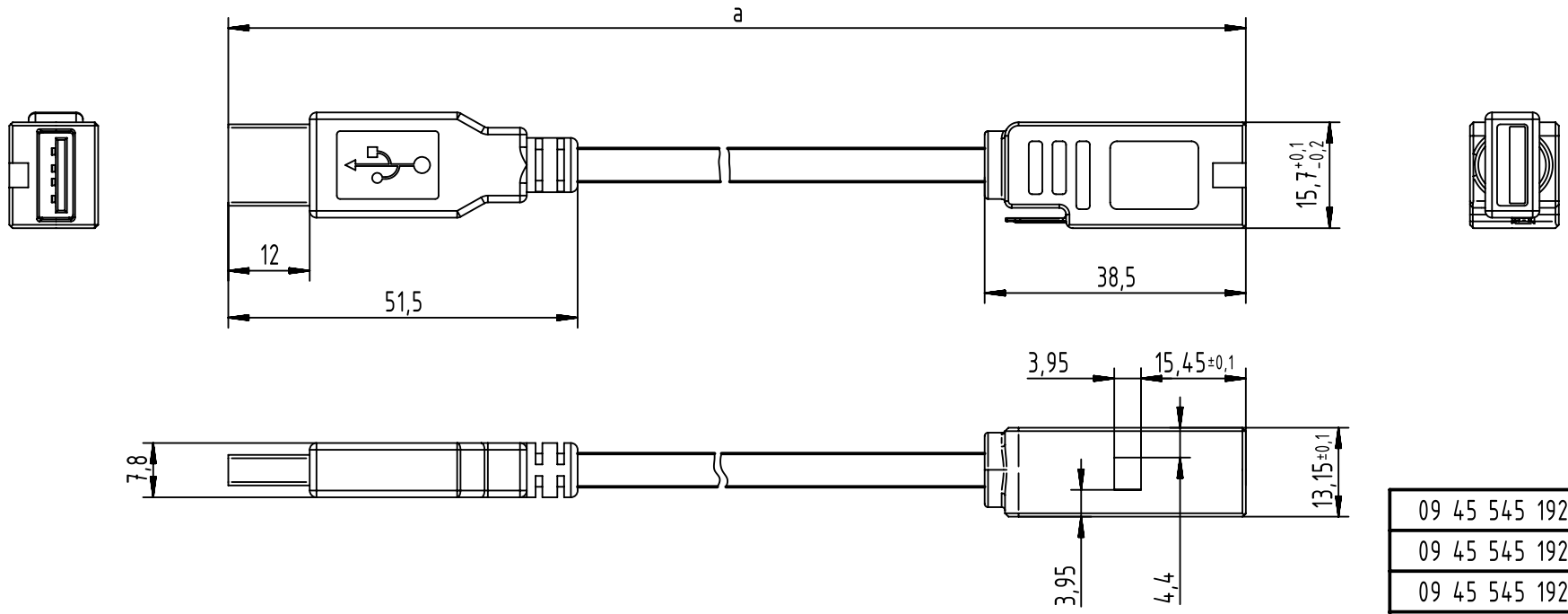

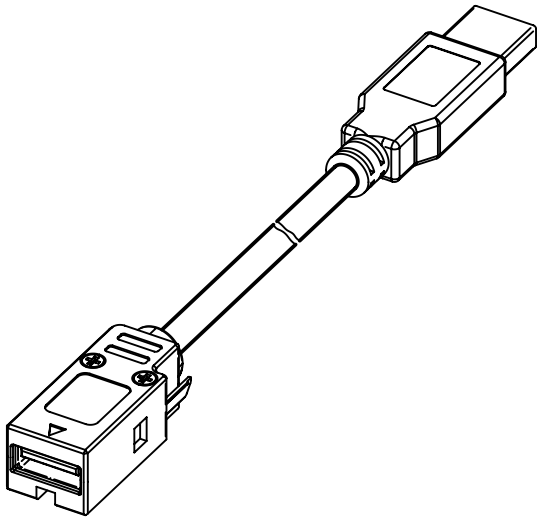

part number	a [m]
09 45 545 1928	0,4
09 45 545 1927	0,15
09 45 545 1926	4,0
09 45 545 1925	5,0
09 45 545 1924	3,0
09 45 545 1923	2,0
09 45 545 1922	1,5
09 45 545 1921	1,0
09 45 545 1920	0,5

All Dimensions in mm
Original Size DIN A4

Scale 1:1

Free size tol. ISO 2768 mH

Ref.

Sub. TB 0945545192X / 500000091377 / 2015-07-10

All rights reserved

Department EC PD - DE

HARTING Electronics GmbH
D-32339 Espelkamp

Created by	Inspected by	Standardisation	Date	State
STORCK	ELLERMANN	HOFFMANN	2015-08-24	Final Release

Title HIFF USB 2.0 A-A cable

Doc-Key / ECM-Nr. 100628777/UGD/000/B 500000093476

Type TB

Number 0945545192X

Rev. B

Page 1/1

A4