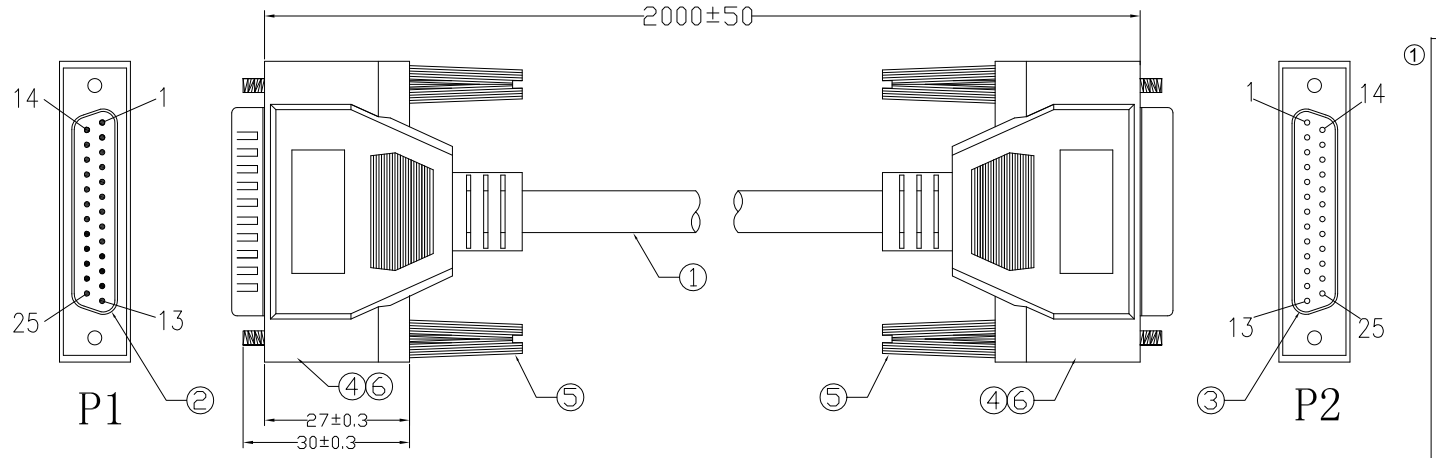

① PIN ASSIGNMENT

P1	P2
1	1
2	2
3	3
4	4
5	5
6	6
7	7
8	8
9	9
10	10
11	11
12	12
13	13
14	14
15	15
16	16
17	17
18	18
19	19
20	20
21	21
22	22
23	23
24	24
25	25
SHELL	SHELL

Electrical test:
1.100% short,open,miswire test
2.Conduct resistance:5 Ohm(max)
3.Insulation resistance:10Mohm(min)
4.dielectric test:DC 300V

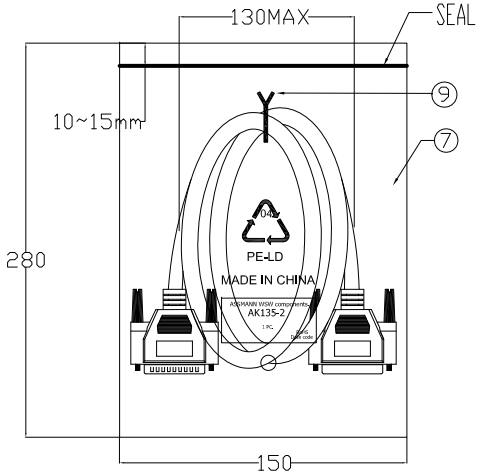

NO.	NAME	Q'TY	SPECIFICATION
⑨	TIE	1	WHITE L=80mm
⑧	PE BAG	1/10	CLEAR SIZE:360*380*0.05mm PRINT BLACK"MADE IN CHINA"+"10PCS".
⑦	PE BAG	1	CLEAR SIZE:150*280*0.05mm PRINT BLACK"MADE IN CHINA".
⑥	TUBE	2	HEAT SHRINK TUBE BLACK OD1.5*20MM
⑤	SCREW	4	#4-40UNC TYPE L=30mm,NICKEL PLATED,MOLD:BEIGE(IV-29) ABS
④	IN JACKET	18g	CLEAR LD-PE (Mould NO.:NM-33)
	OUT JACKET	60g	BEIGE(IV-29) 40P PVC(Mould NO.WM-017)
③	CONN	1	DB 25P FEMALE SODER TYPE PIN G/F SHELL NI-PLATED INSULATOR COLOR:BLUE
②	CONN	1	DB 25P MALE SODER TYPE PIN G/F SHELL NI-PLATED INSULATOR COLOR:BLUE
①	CABLE	1	NOUL 28AWG*25C+D+AL/MY OD6.5mm JACKET BEIGE(IV-29) L=2000±10MM

RoHS compliant
Unit: mm

Scale	Free					Date	Name	Customer-No.
TOLERANCE					Drawn	20.02.2017	Amy	
					Approved	04.09.2017	Fred	ASSMANN WSW-No. AK135-2
DIM	TOL	①	Delete the wire color for pin assignment	04.09.2017	Fred			Drawing-No. ASS 7874 CA rev01
		⓪	Drawn	20.02.2017	Amy			
Angle	TOL	Id.	Modification	Date	Name			Replace / Sheet

ASSMANN WSW components