Amphenol commercial products (Chengdu) Co.,LTD

Product/Process Change Notification

To : ALL CUSTOMER

From :

Amphenol commercial products(Chengdu)Co.,LTD

Initiator/Title/Date: Hachi.Chen/Product Engineer/20220712

E-mail: hachi.chen@amphenolacpcd.com

PCN No.: PCN-22028

Rev.: 1

Amphenol P/N	CEXXXXXGXXXXXXX	Customer P/N	/	Description	CE STANDERD CONNECTOR WITH GUIDE HOLE SERIES,VT
Category of Change	☐ Design ☐ Materials ☐ Production process ☐ Customer Specification ■ Others: EOL				
Revised documents / Supporting documents attached due to this change: ☐ Customer Drawing ☐ Product Specification ☐ Packing Specification ☐ Evaluation Report/Data ■ Others: NA					
Reason of Change	CEXXXXXGXXXXXXX,CE STANDERD CONNECTOR WITH GUIDE HOLE SERIES,VT; END OF LIFE				
Description	Before change applied		After change applied		
	ACTIVE （示例图） 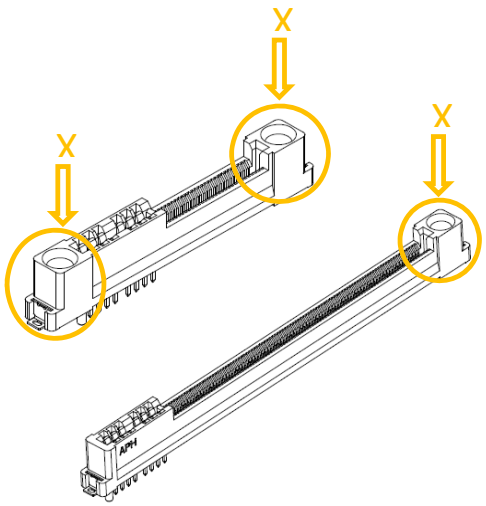 		END OF LIFE		

Implementation Schedule:

Planned implementation Date：2022.09.01 Indicated: P/N

Respond from Customer

☐ Agree

☐ Disagree

Comments:

Dept./Title:

Signature/Date: