Alle Rechte vorbehalten/ *All rights reserved*

Mating face according to : MIL-C-24308 / DIN 41652 / CECC 75.01-802

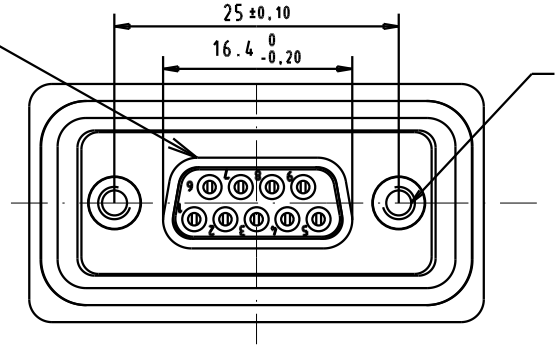

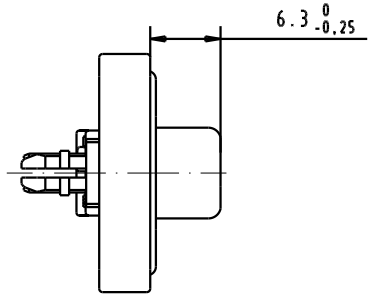

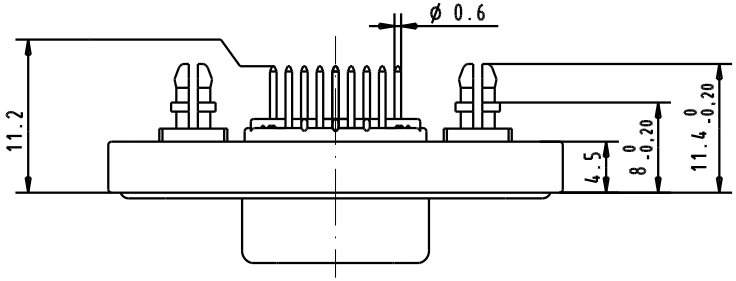

1) Protection standard IP 67 according to IEC 529 / DIN 40050.

PCB layout hole
component side
(PCB holes plating : Tin)

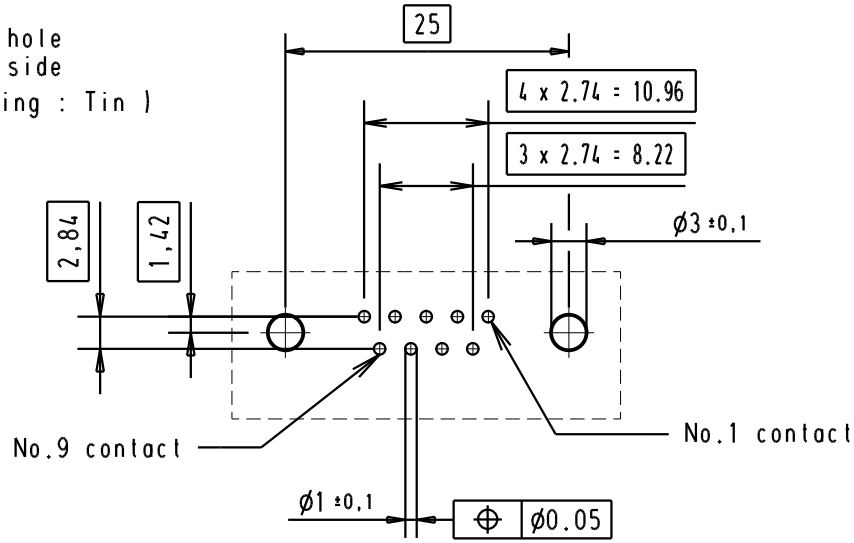

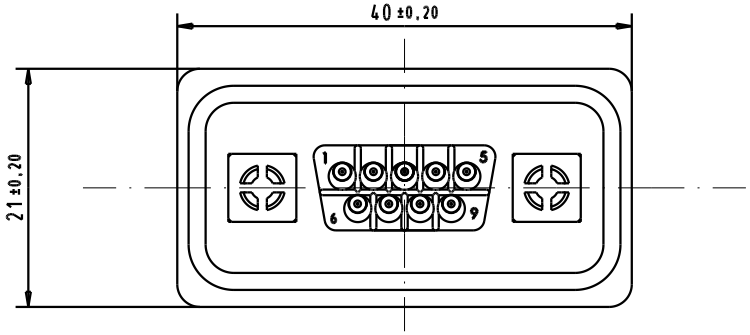

09 67 509 6775	Au plating 0,76 µm mini
Part Number	Performance Level

				Dat.	Name
			Detail.	10/10/03	S.H.
			Insp.		
			Stand.		
31559	10/10/03	S.H			
Mod.	Dat.	Name			

All Dim. in mm
Orig. Size DIN A 4

HARTING ELEKTRONIK
F-95972 Paris

D-SUB IP67 female 9 Poles
straight solder pin with
4-40 UNC Spacer and clip

TB 09 67 509 6775

Sub.

Maßstab/ *Scale*

Blatt/ *Page*